POWER SYSTEMS NETWORK MANAGEMENT

PROTECTION AND SUBSTATION AUTOMATION SYSTEMS

WBS NO: S-13656

ABB

414,

SECON

RIYAD

CONTRACTOR :	ABB Contracting Company
CLIENT :	National Grid SA
PROJECT :	CONSTRUCTION OF NEW 132/13.8kV SS 8709 IN AL-K
SUBSTATION :	S/S 8709
CONTRACT NO. :	11131113/00
TITLE :	Assembly Drawing - +R03.1 [Under Ground Feede

REV. NO.	DATE	DESCRIPTION
00	13 04	FOR APPROVAL

AS-BUILT BY _____ DATE _____

CONTRACT NO. 11131113/00

JOB ORDER NO. S-13656

DRAWN BY RIZ CHECKED BY KVR

DATE STARTED 24.01.2013 DATE COMPLETED _____

DPRG. DEPT. CTPD ENG. DEPT. AUT-PSAC

COVER SHEET

132kV UGF-8710 RELAY PANEL-1 +R03.1

S/S 8709-132/13.8KV IN AL-KHARJ CITY

RIYADH SAUDI ARABIA

نقل الكهرباء

INDEX	PLANT NO.
-	C421

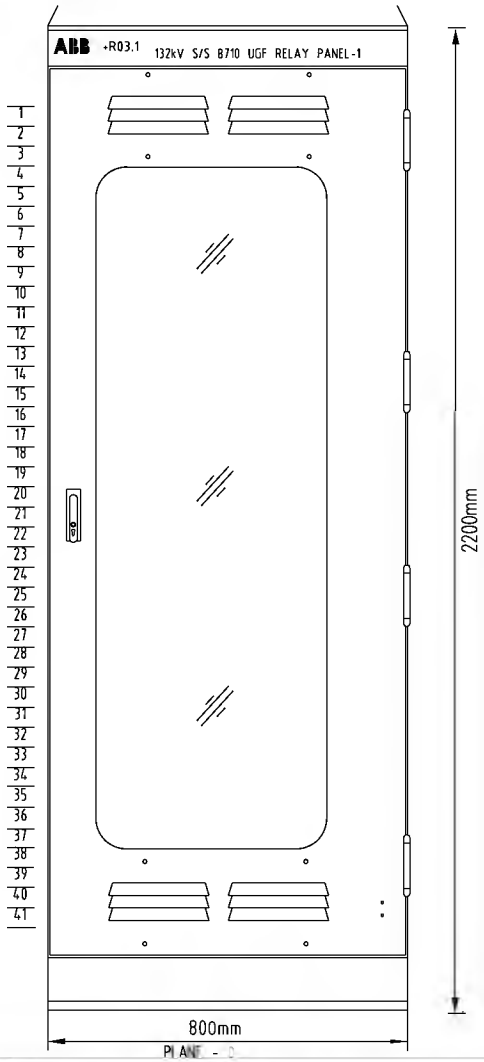

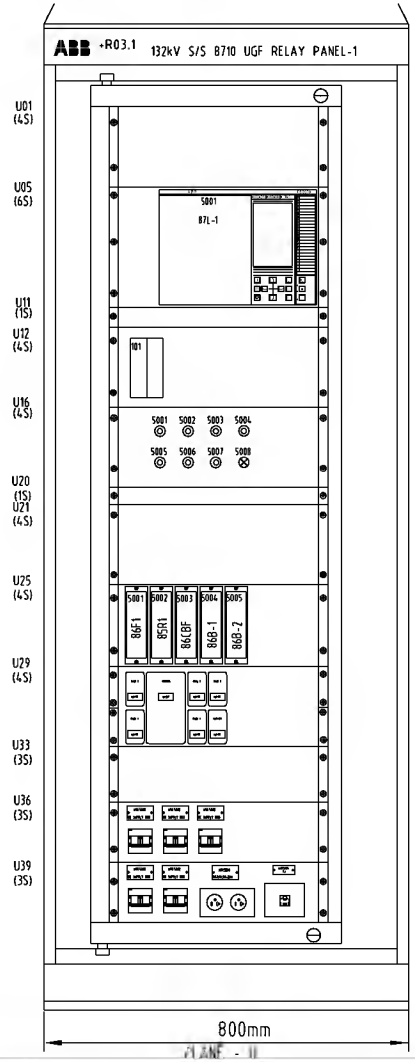

MOUNTING PLANES	
EXTERIOR COLOUR	AIRCRAFT GREY (COLOUR TO SHADE NO. RAL7038
INTERIOR COLOUR	SIGNAL WHITE (COLOUR TO SHADE NO. RAL9003
CUBICLE TYPE	VSH 200
FRAME	HINGED FRAME, MOVABLE
CUBICLE TYPE	FRONT ACCESS
MATERIAL OF CONSTRUCTION	ALUZINK STEEL
DIMENSIONS	2200 X 800 X 800 mm (H X W X D)
CLASS OF PROTECTION	IP 41
APPROX WEIGHT	200KG
CABLE ENTRY	BOTTOM

AS-BUILT BY _____ DATE _____ | CONTRACT NO. 11131113/00 | JOB ORDER NO. S-13656

REV. NO.	DATE	DESCRIPTION
00	13 04	FOR APPROVAL

DRAWN BY RIZ CHECKED BY KVR
DATE STARTED 24.01.2013 DATE COMPLETED _____
ORGG. DEPT. CTPD ENG. DEPT. AUT-PSAC

ASSEMBLY DRAWING
132kV UGF-8710 RELAY PANEL-1 +R03.1
S/S 8709-132/13.8KV IN AL-KHARJ CITY
RIYADH SAUDI ARABIA

الشركة الوطنية لنقل الكهرباء
نقل الكهرباء
National Grid SA

INDEX	PLANT NO.	DRAWING NUMBER	SHEET NO. SHT	SHEET NO. CONT.	REV. NO.
-	C421	CD-322917	G01	G02	00

NG/D2-0 (2012/01)
DMS VECTOR NGD200

THIS DRAWING AND THE INFORMATION CONTAINED HEREIN ARE THE SOLE PROPERTY OF National Grid SA NO REPRODUCTION IN FULL OR IN PART SHALL BE OBTAINED FROM THIS DOCUMENT WITHOUT THE WRITTEN CONSENT OF ITS OWNER.

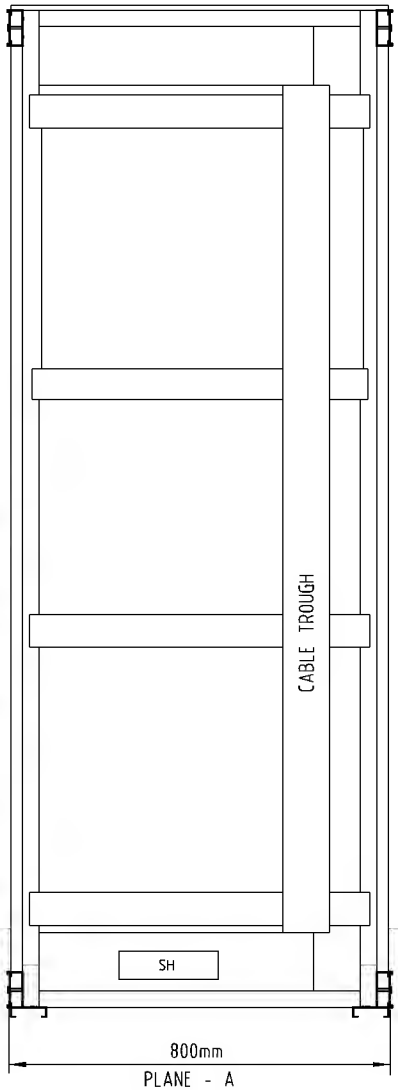

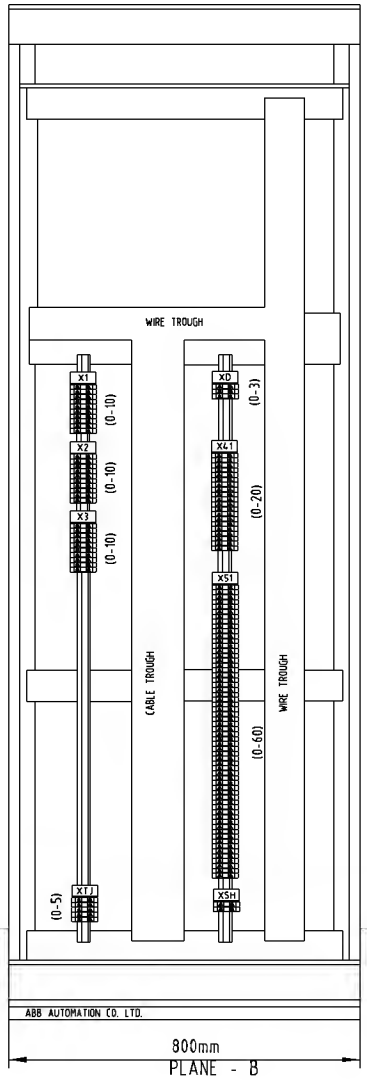

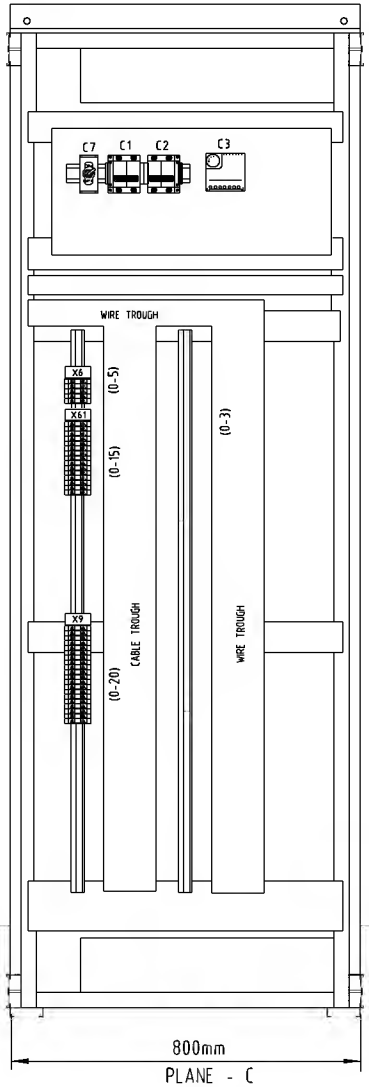

PLAN-C

SCH.REF	DESCRIPTION	TYPE	MAKE
X6	ALARM SUPPLY	M6/8.RS	ENTRELEC
X61	ALARM CIRCUITS	M6/8.SNB	ENTRELEC
X9	SPARE CIRCUITS	M6/8.RS	ENTRELEC
XTJ	TELEPHONE JACK	M6/8.RS	ENTRELEC
XSH	SPACE HEATER	M6/8.RS	ENTRELEC

PLAN-B

SCH.REF	DESCRIPTION	TYPE	MAKE
X1	CT CIRCUITS	OTTA 6T P/P	PHONIX
X2	VT CIRCUITS	D6/8.ST1.RS	ENTRELEC
X3	AC CIRCUITS	D6/8.ST1.RS	ENTRELEC
X4,41	DC CIRCUITS	D6/8.ST1.RS	ENTRELEC
X51	DC CIRCUITS	M6/8.RS	ENTRELEC

AS-BUILT BY _____ DATE _____ | CONTRACT NO. 11131113/00 | JOB ORDER NO. S-13656

REV. NO.	DATE	DESCRIPTION
00	13 04	FOR APPROVAL

DRAWN BY RIZ CHECKED BY KVR
DATE STARTED 24.01.2013 DATE COMPLETED _____
DPRG. DEPT. CTPD ENG. DEPT. AUT-PSAC

ASSEMBLY DRAWING
132kV UGF-8710 RELAY PANEL-1 +R03.1
S/S 8709-132/13.8KV IN AL-KHARJ CITY
RIYADH SAUDI ARABIA

الشركة الوطنية لنقل الكهرباء
نقل الكهرباء
National Grid SA

INDEX	PLANT NO.	DRAWING NUMBER	SHEET NO. SHT	SHEET NO. CONT.	REV. NO.
-	C421	CD-322917	G02	G03	00

NG/D2-0 (2012/01)
DMS VECTOR NGD200

THIS DRAWING AND THE INFORMATION CONTAINED HEREIN ARE THE SOLE PROPERTY OF National Grid SA NO REPRODUCTION IN FULL OR IN PART SHALL BE OBTAINED FROM THIS DOCUMENT WITHOUT THE WRITTEN CONSENT OF ITS OWNER.

BASE PLATE/ FOUNDATION

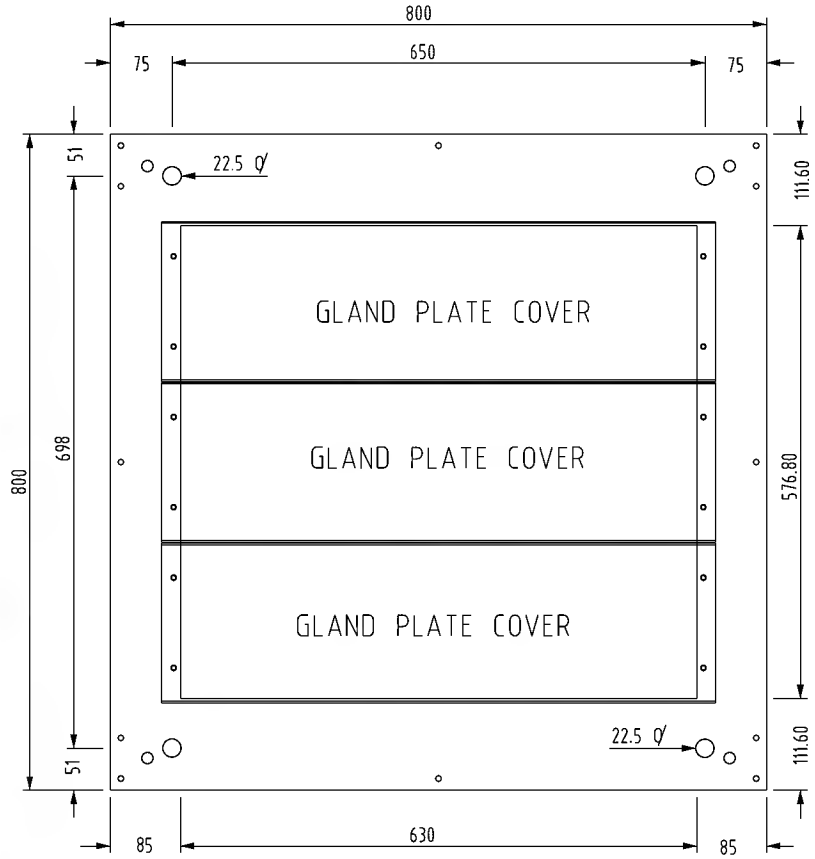

PLAN

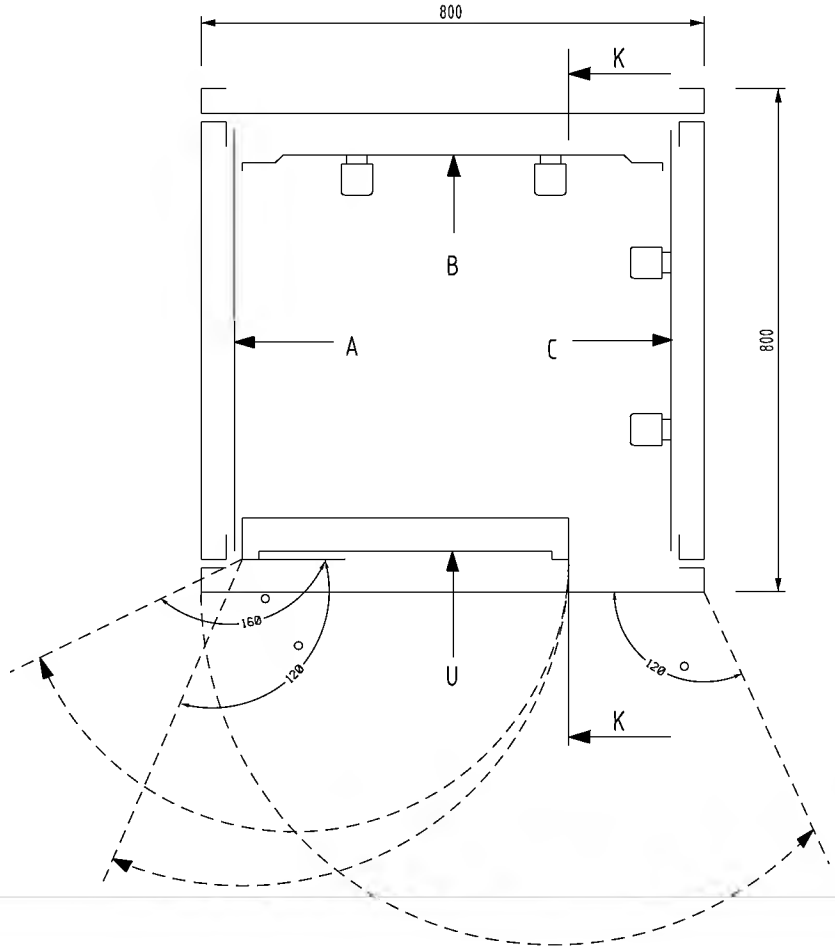

AS-BUILT BY _____ DATE _____	CONTRACT NO. 11131113/00	JOB ORDER NO. S-13656	ASSEMBLY DRAWING	الشركة الوطنية لنقل الكهرباء — نقل الكهرباء National Grid SA
	DRAWN BY RIZ	CHECKED BY KVR	132kV UGF-8710 RELAY PANEL-1 +R03.1	
00 / 13 04 / FOR APPROVAL	DATE STARTED 24.01.2013	DATE COMPLETED _____	S/S 8709-132/13.8KV IN AL-KHARJ CITY	
REV. NO. / DATE / DESCRIPTION	ORG. DEPT. CTPD	ENG. DEPT. AUT-PSAC	RIYADH SAUDI ARABIA	

INDEX	PLANT NO.	DRAWING NUMBER	SHEET NO. SHT	SHEET NO. CONT.	REV. NO.
-	C421	CD-322917	G03	G04	00

NG/D2-0 (2012/01)

DMS | VECTOR | NGD200

THIS DRAWING AND THE INFORMATION CONTAINED HEREIN ARE THE SOLE PROPERTY OF National Grid SA NO REPRODUCTION IN FULL OR IN PART SHALL BE OBTAINED FROM THIS DOCUMENT WITHOUT THE WRITTEN CONSENT OF ITS OWNER.

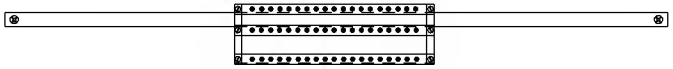

TOP VIEW FOR EARTHING BAR

U PLANE TOP LABEL

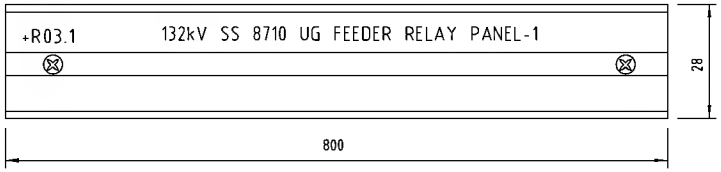

MANUFACTURING LABEL

ABB ABB Automation Co.Ltd.

PROJECT	:	National Grid SA S/S 8709
ORDER REFERENCE	:	2875 RF S13656
YEAR OF MANUFACTURE	:	2013
PANEL NO.	:	+R03.1
DRAWING NO.	:	S13656-CD-323919

MADE IN THE KINGDOM OF SAUDI ARABIA

U PLANE BOTTOM LABEL

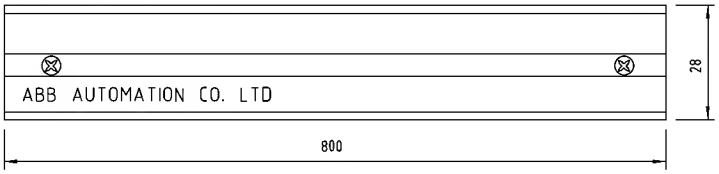

REV. NO.	DATE	DESCRIPTION
00	13 04	FOR APPROVAL

AS-BUILT BY _____ DATE _____

CONTRACT NO. 11131113/00 | JOB ORDER NO. S-13656

DRAWN BY RIZ CHECKED BY KVR

DATE STARTED 24.01.2013 DATE COMPLETED _____

DPRG. DEPT. CTPD ENG. DEPT. AUT-PSAC

ASSEMBLY DRAWING

132kV UGF-8710 RELAY PANEL-1 +R03.1

S/S 8709-132/13.8KV IN AL-KHARJ CITY

RIYADH SAUDI ARABIA

الشركة الوطنية لنقل الكهرباء

نقل الكهرباء National Grid SA

INDEX	PLANT NO.	DRAWING NUMBER	SHEET NO. SHT	SHEET NO. CONT.	REV. NO.
-	C421	CD-322917	G04	L00	00

NG/D2-0 (2012/01)

DMS | VECTOR | NGD200

THIS DRAWING AND THE INFORMATION CONTAINED HEREIN ARE THE SOLE PROPERTY OF National Grid SA NO REPRODUCTION IN FULL OR IN PART SHALL BE OBTAINED FROM THIS DOCUMENT WITHOUT THE WRITTEN CONSENT OF ITS OWNER.

POWER SYSTEMS NETWORK MANAGEMENT
PROTECTION AND SUBSTATION AUTOMATION SYSTEMS
WBS NO: S-13656

ABB AUTOMATION COMPANY LTD.,
414, AL-KHARJ ROAD
SECOND INDUSTRIAL CITY
RIYADH-11383 K.S.A

CONTRACTOR : ABB Contracting Company

CLIENT : National Grid SA

PROJECT : CONSTRUCTION OF NEW 132/13.8kV SS 8709 IN AL-KHARJ CITY

SUBSTATION : S/S 8709

CONTRACT NO. : 11131113/00

TITLE : LIST OF APPARATUS +R03.1 [Under Ground Feeder]

THIS DRAWING AND THE INFORMATION CONTAINED HEREIN ARE THE SOLE PROPERTY OF National Grid SA NO REPRODUCTION IN FULL OR IN PART SHALL BE OBTAINED FROM THIS DOCUMENT WITHOUT THE WRITTEN CONSENT OF ITS OWNER.

REV. NO.	DATE	DESCRIPTION
00	13 04	FOR APPROVAL

AS-BUILT BY _____ DATE _____ | CONTRACT NO. 11131113/00 | JOB ORDER NO. S-13656

DRAWN BY RIZ CHECKED BY KVR
DATE STARTED 24.01.2013 DATE COMPLETED _____
ORGG. DEPT. CTPD ENG. DEPT. AUT-PSAC

COVER SHEET
132kV UGF-8710 RELAY PANEL-1 +R03.1
S/S 8709-132/13.8KV IN AL-KHARJ CITY
RIYADH SAUDI ARABIA

الشركة الوطنية لنقل الكهرباء
نقل الكهرباء
National Grid SA

INDEX	PLANT NO.	DRAWING NUMBER	SHEET NO. SHT	SHEET NO. CONT.	REV. NO.
-	C421	CD-322917	L00	L01	00

NG/D2-0 (2012/01)
DMS VECTOR NGD200

SR. NO.	GA. REF.	SCH. REF.	D E S C R I P T I O N	SHT.	QTY.	TYPE	MAKE	ORDERING INFORMATION	COUNTRY OF ORIGIN
			RELAY CUBICLE- +R03.1 ACCOMODATING THE FOLLOWING		1	VSH 200	ABB		
1	U05.5001	87L-1	NUMERICAL DIFF PROTECTION TERMINAL WITH THE FOLLOWING	298	1	RED 670	ABB	1MRK 004 810-DC	SWEDEN
			FEATURES :	298A					
			ANALOG MODULE(6I+6U)	299					
			RATED POWER SUPPLY MODULE : (90-250V)DC						
			BINARY I/P MODULE -1NO						
			BINARY O/P MODULE-1NO						
			OPTICAL ETHERNET MODULE IEC 61850-8-1/100 BASE FX CHANNEL GLASS						
			MEDIUM GRAPHIC HMI,15 CONTROLLABLE OBJECTS,1X 19"						
2	U12.101	TS-1	TEST SWITCH FOR RED 670 RELAY	224	1	RTXP24	ABB	RK 926 315-AC	
3	U16.5001	S86F1	PUSH BUTTON FOR 86CBF & 86F1 TRIP RELAY RESET PB	232	2	MP1-10B	ABB	1SFA 611 100 R1006	SWEDEN
	U16.5002	S86CBF	BUTTON COLOUR : BLACK			MCBH-20		1SFA 611 605 R1102	
			CONTACT DATA : 1NO+1NC						
4	U16.5003	S86B-1	PUSH BUTTON FOR 86B & LT TRIP RELAY RESET PB	232	3	MP1-10B	ABB	1SFA 611 100 R1006	SWEDEN
	U16.5004	S86B-2	BUTTON COLOUR : BLACK			MCBH-20		1SFA 611 605 R1102	
	U16.5005	LT	CONTACT DATA : 1NO+1NC						
5	U16.5006	S01	PUSH BUTTON FOR PROTECTION IN	232	1	MP1-10B	ABB	1SFA 611 100 R1006	SWEDEN
			BUTTON COLOUR : BLACK			MCBH-20		1SFA 611 605 R1102	
			CONTACT DATA : 1NO+1NC						
6	U16.5007	S02	PUSH BUTTON FOR PROTECTION OUT	232	1	MP1-10B	ABB	1SFA 611 100 R1006	SWEDEN
			BUTTON COLOUR : BLACK			MCBH-20		1SFA 611 605 R1102	
			CONTACT DATA : 1NO+1NC						
7	U16.5008	L01	INDICATION LAMP FOR FPFM OUT	277	1	MC1-10010	ABB	1SFA 611 400 R1003	
			LENS : WHITE			MCBH-003		1SFA 611 605 R1400	SWEDEN
			LED RATING : 110-130V,4-6MA			KA2-2145		1SFA 616 921 R2145	
			HOLDER RATING : 130V WITH RESISTORS DIODEBLOCK						

AS-BUILT BY _____ DATE _____

REV. NO.	DATE	DESCRIPTION
00	13 04	FOR APPROVAL

CONTRACT NO. 11131113/00 | JOB ORDER NO. S-13656

DRAWN BY RIZ CHECKED BY KVR

DATE STARTED 24.01.2013 DATE COMPLETED _____

DPRG. DEPT. CTPD ENG. DEPT. AUT-PSAC

LIST OF APPARATUS

132kV UGF-8710 RELAY PANEL-1 +R03.1

S/S 8709-132/13.8KV IN AL-KHARJ CITY

RIYADH SAUDI ARABIA

الشركة الوطنية لنقل الكهرباء

نقل الكهرباء National Grid SA

INDEX	PLANT NO.	DRAWING NUMBER	SHEET NO. SHT	SHEET NO. CONT.	REV. NO.
-	C421	CD-322917	L01	L02	00

NG/D2-0 (2012/01)

DMS VECTOR NGD200

THIS DRAWING AND THE INFORMATION CONTAINED HEREIN ARE THE SOLE PROPERTY OF National Grid SA NO REPRODUCTION IN FULL OR IN PART SHALL BE OBTAINED FROM THIS DOCUMENT WITHOUT THE WRITTEN CONSENT OF ITS OWNER.

SR. NO.	GA. REF.	SCH. REF.	DESCRIPTION	SHT.	QTY.	TYPE	MAKE	ORDERING INFORMATION	COUNTRY OF ORIGIN
8	U25.5001	86F1	HIGH BURDEN TYPE HAND/ELECTRICAL RESET TRIP RELAY	232	1	MVAJ105	ALSTOM	MVAJ105RA0802A	UK
			AUXILIARY VOLTAGE : 110 - 125V DC						
			OUTPUT CONTACTS : 8NO+2NC						
			OPERATION INDICATOR : HAND RESET FLAG						
9	U25.5002	85R1	HIGH BURDEN TYPE SELF RESET TRIP RELAY	233	1	MVAJ101	ALSTOM	MVAJ101RA0800B	UK
			AUXILIARY VOLTAGE : 110 - 125V DC						
			OUTPUT CONTACTS : 10 NO						
			OPERATION INDICATOR : SELF RESET FLAG						
10	U25.5003	86CBF	HIGH BURDEN TYPE HAND/ELECTRICAL RESET TRIP RELAY	276	1	MVAJ105	ALSTOM	MVAJ105RA0802A	UK
			AUXILIARY VOLTAGE : 110 - 125V DC						
			OUTPUT CONTACTS : 8NO+2NC						
			OPERATION INDICATOR : HAND RESET FLAG						
11	U25.5004	86B-1	HIGH BURDEN TYPE HAND/ELECTRICAL RESET TRIP RELAY	276	1	MVAJ105	ALSTOM	MVAJ105RA0802A	UK
			AUXILIARY VOLTAGE : 110 - 125V DC						
			OUTPUT CONTACTS : 8NO+2NC						
			OPERATION INDICATOR : HAND RESET FLAG						
12	U25.5005	86B-2	HIGH BURDEN TYPE HAND/ELECTRICAL RESET TRIP RELAY	277	1	MVAJ105	ALSTOM	MVAJ105RA0802A	UK
			AUXILIARY VOLTAGE : 110 - 125V DC						
			OUTPUT CONTACTS : 8NO+2NC						
			OPERATION INDICATOR : HAND RESET FLAG						

AS-BUILT BY _____ DATE _____

REV. NO.	DATE	DESCRIPTION
00	13 04	FOR APPROVAL

CONTRACT NO. 11131113/00 | JOB ORDER NO. S-13656

DRAWN BY RIZ CHECKED BY KVR

DATE STARTED 24.01.2013 DATE COMPLETED _____

ORGG. DEPT. CTPD ENG. DEPT. AUT-PSAC

LIST OF APPARATUS

132kV UGF-8710 RELAY PANEL-1 +R03.1

S/S 8709-132/13.8KV IN AL-KHARJ CITY

RIYADH SAUDI ARABIA

الشركة الوطنية لنقل الكهرباء

نقل الكهرباء National Grid SA

INDEX	PLANT NO.	DRAWING NUMBER	SHEET NO. SHT	SHEET NO. CONT.	REV. NO.
-	C421	CD-322917	L02	L03	00

NG/D2-0 (2012/01)

DMS VECTOR NGD200

THIS DRAWING AND THE INFORMATION CONTAINED HEREIN ARE THE SOLE PROPERTY OF National Grid SA NO REPRODUCTION IN FULL OR IN PART SHALL BE OBTAINED FROM THIS DOCUMENT WITHOUT THE WRITTEN CONSENT OF ITS OWNER.

SR. NO.	GA. REF.	SCH. REF.	DESCRIPTION	SHT.	QTY.	TYPE	MAKE	ORDERING INFORMATION	COUNTRY OF ORIGIN
13	U29.101	74R1/74IT1	DUAL COIL RELAY FOR R1 DC /74IT1 DC	232,233	2	RXSF 1	ABB	RK 271 019-AN	SWEDEN
	U29.301	74RS/74IS	AUXILIARY VOLTAGE : 110-125VDC	277					
			CONTACT DATA : 1NO + 2NC PER COIL						
14	U29.107	K01M	BISTABLE RELAY	232	1	RXMVB 4	ABB	RK 251 401-AP	SWEDEN
			AUXILIARY VOLTAGE : 125V DC						
			CONTACT DATA : 7NC+7NO						
15	U29.119	TMR/86F1	DELAY FOR PICKUP RELAY	232	3	RXKL1	ABB	1MR 000 006-AB	SWEDEN
	U29.319	TMR/86B-1	AUXILIARY VOLTAGE : 24-250V DC	276					
	U29.125	TMR/86B-2	CONTACT DATA : 2C/O	277					
16	U29.325	R1	RESISTOR UNIT FOR TCS	291	1	RXTMA1	ABB	RK 711 008-AF	SWEDEN
			RESISTOR WATT : 6.8 K OHMS						

AS-BUILT BY _____ DATE _____

REV. NO.	DATE	DESCRIPTION
00	13 04	FOR APPROVAL

CONTRACT NO. 11131113/00

JOB ORDER NO. S-13656

DRAWN BY RIZ CHECKED BY KVR

DATE STARTED 24.01.2013 DATE COMPLETED _____

DPRG. DEPT. CTPD ENG. DEPT. AUT-PSAC

LIST OF APPARATUS

132kV UGF-8710 RELAY PANEL-1 +R03.1

S/S 8709-132/13.8KV IN AL-KHARJ CITY

RIYADH SAUDI ARABIA

الشركة الوطنية لنقل الكهرباء

نقل الكهرباء National Grid SA

INDEX	PLANT NO.	DRAWING NUMBER	SHEET NO. SHT	SHEET NO. CONT.	REV. NO.
-	C421	CD-322917	L03	L04	00

NG/D2-0 (2012/01)

DMS VECTOR NGD200

THIS DRAWING AND THE INFORMATION CONTAINED HEREIN ARE THE SOLE PROPERTY OF National Grid SA NO REPRODUCTION IN FULL OR IN PART SHALL BE OBTAINED FROM THIS DOCUMENT WITHOUT THE WRITTEN CONSENT OF ITS OWNER.

SR. NO.	GA REF.	SCH. REF.	D E S C R I P T I O N	SHEET NO.	QTY.	TYPE	MAKE	ORDERING INFORMATION	COUNTRY OF ORIGIN
17			MCB 2 POLE 6A, FOR DC SUPPLY	216	5	S282UC-K6	ABB	GH S282 0164 R0317	GERMANY
			WITH 2NC AUXILIARY CONTACT			S2-H02		GH S270 1916 R0003	
	U39.5001	Q1	R1+_ SUPPLY						
	U39.5002	Q2	IT1+_ SUPPLY						
	U36.5001	Q3	RS+_ SUPPLY						
	U36.5002	Q4	IS+_ SUPPLY						
	U36.5003	Q5	TC1+_ SUPPLY						
18	U39.5003	C01	CONVENIENCE OUTLET 10A, 127V AC	211	1	USM45 &	LEGRAND	74140 & 74180	FRANCE
		C02	CONVENIENCE OUTLET 10A, 220V AC			USMS45			
19		C1,C2	MINIATURE CIRCUIT BREAKER, 2 POLE, 10A FOR	211	2	S202-K10	ABB	2CDS 252 001 R0427	SWEDEN
			CONVENIENCE OUTLET WITH AUXILIARY SWITCH, 1NO + 1NC CONTACTS			S2C-H11L		2CDS 270 1917 R0001	
20		C3	THERMOSTAT FOR SPACE HEATER, 5-60 C°	211	1	SK 3110	RITTAL	SK 3110	
21	U39.5004	TJ	TELEPHONE JACK 1GANG 4WIRE	211	1	EDF410	EDISON	EDF410	THIWAN
22		C7	ON/OFF SWITCH FOR SPACE HEATER	211	1	M2SS1-10B	ABB	1SFA 611 200 R1006	SWEDEN
						MCBH-10		1SFA 611 605 R1101	
23		DS	DOOR SWITCH FOR CONTROL OF CUBICLE INTERNAL ILLUMINATION LAMP	211	1	LS30P	ABB	1SBV 010213 R1202	SWEDEN
24		IL	INTERNAL ILLUMINATION CUBICLE LAMP SUITABLE FOR	211	1	T-4	SUNON	SP-20W	
			127V AC, 60Hz SUPPLY, 20W						
25		SH	SPACE HEATER, 150W, 120V, 60Hz	211	1	RICA	GRUPPO	1FZEK 006 C001	ITALY

AS-BUILT BY _____ DATE _____

REV. NO.	DATE	DESCRIPTION
00	13 04	FOR APPROVAL

CONTRACT NO. 11131113/00 | JOB ORDER NO. S-13656

DRAWN BY RIZ CHECKED BY KVR

DATE STARTED 24.01.2013 DATE COMPLETED _____

ORG. DEPT. CTPD ENG. DEPT. AUT-PSAC

LIST OF APPARATUS

132kV UGF-8710 RELAY PANEL-1 +R03.1

S/S 8709-132/13.8KV IN AL-KHARJ CITY

RIYADH SAUDI ARABIA

الشركة الوطنية لنقل الكهرباء

نقل الكهرباء National Grid SA

INDEX	PLANT NO.	DRAWING NUMBER	SHEET NO. SHT	SHEET NO. CONT.	REV. NO.
-	C421	CD-322917	L04	L05	00

NG/D2-0 (2012/01)

DMS VECTOR NGD200

THIS DRAWING AND THE INFORMATION CONTAINED HEREIN ARE THE SOLE PROPERTY OF National Grid SA NO REPRODUCTION IN FULL OR IN PART SHALL BE OBTAINED FROM THIS DOCUMENT WITHOUT THE WRITTEN CONSENT OF ITS OWNER.

SR. NO.	ITEM DESIGNATION	DESCRIPTION	SHEET.NO.	QTY.	TYPE	MAKE	ORDERING INFORMATION	COUNTRY OF ORIGIN
23	X1	BOLT CONNECTING TERMINAL BLOCKS FOR DISCONNECTABLE CT CIRCUITS	301	10	OTTA 6T P/P	PHOENIX	0790462	GERMANY
	X2	SPRING LOADED TERMINAL BLOCKS FOR DISCONNECTABLE VT CIRCUITS	301	10	D6/8.ST1.RS	ENTRELEC	1SNA 115 831 R0400	FRANCE
	X3	SPRING LOADED TERMINAL BLOCKS FOR DISCONNECTABLE AC CIRCUITS	301	10	D6/8.ST1.RS	ENTRELEC	1SNA 115 831 R0400	FRANCE
	X41	SPRING LOADED TERMINAL BLOCK FOR DISCONNECTABLE DC CIRCUITS	301	20	D6/8.ST1.RS	ENTRELEC	1SNA 115 831 R0400	FRANCE
	X51	SPRING LOADED TERMINAL BLOCK FOR DC PROTN. CIRCUITS	301	60	M6/8.RS	ENTRELEC	1SNA 115 688 R2500	FRANCE
	X6	SPRING LOADED TERMINAL BLOCK FOR FOR COMMON ALARM	301	5	M6/8.RS	ENTRELEC	1SNA 115 688 R2500	FRANCE
	X61	KNIFE TYPE TERMINAL BLOCKS FOR COMMON ALARM CIRCUITS	301	15	M6/8.SNB	ENTRELEC	1SNA 115 685 R1200	FRANCE
	X9	SPRING LOADED TERMINAL BLOCKS FOR SPARE CIRCITS	301	20	M6/8.RS	ENTRELEC	1SNA 115 688 R2500	FRANCE
	XD	TERMINAL BLOCKS WITH BLOCKING DIODE, Vrrm=1kV, If=3A	276	3	N4/6.S	ENTRELEC	11521310	FRANCE
		AND SURGE TRAP, ENERGY ABSORPTION RATING 8J (10/1000mS)			IN5408	MEJDAF	02-049	
					V150ZA1	RS	239-270	
	XTJ	SPRING LOADED TERMINAL BLOCKS FOR TELEPHONE JACK	301	5	M6/8.RS	ENTRELEC	1SNA 115 688 R2500	FRANCE
	XSH	SPRING LOADED TERMINAL BLOCKS FOR SPACE HEATER	301	3	M6/8.RS	ENTRELEC	1SNA 115 688 R2500	FRANCE

AS-BUILT BY _____ DATE _____

REV. NO.	DATE	DESCRIPTION
00	13 04	FOR APPROVAL

CONTRACT NO. 11131113/00

JOB ORDER NO. S-13656

DRAWN BY RIZ CHECKED BY KVR

DATE STARTED 24.01.2013 DATE COMPLETED _____

OPRG. DEPT. CTPD ENG. DEPT. AUT-PSAC

LIST OF APPARATUS

132kV UGF-8710 RELAY PANEL-1 +R03.1

S/S 8709-132/13.8KV IN AL-KHARJ CITY

RIYADH SAUDI ARABIA

الشركة الوطنية لنقل الكهرباء

نقل الكهرباء National Grid SA

INDEX	PLANT NO.	DRAWING NUMBER	SHEET NO. SHT	SHEET NO. CONT.	REV. NO.
-	C421	CD-322917	L05	L06	00

NG/D2-0 (2012/01)

DMS VECTOR NGD200

THIS DRAWING AND THE INFORMATION CONTAINED HEREIN ARE THE SOLE PROPERTY OF National Grid SA NO REPRODUCTION IN FULL OR IN PART SHALL BE OBTAINED FROM THIS DOCUMENT WITHOUT THE WRITTEN CONSENT OF ITS OWNER.

LABEL REF.	LABEL ENGRAVING	MATERIALS	ENGRAVING	LABEL SIZE	LETTER SIZE
U05.5001	U05.5001 87L-1	ALUMINUM PAPER FOIL	BLACK LETTERS	50X10mm	3mm
U12.101	U12.101 T5-1	ALUMINUM PAPER FOIL	BLACK LETTERS	50X15mm	4mm
U16.5001	U16.5001 SB6F1	TRAFOLITE	BLACK LETTERS ON WHITE BACKGROUND	50X15mm	4mm
U16.5002	U16.5002 5B6CBF	TRAFOLITE	BLACK LETTERS ON WHITE BACKGROUND	50X15mm	4mm
U16.5003	U16.5003 SB6B-1	TRAFOLITE	BLACK LETTERS ON WHITE BACKGROUND	50X15mm	4mm
U16.5004	U16.5004 5B6B-2	TRAFOLITE	BLACK LETTERS ON WHITE BACKGROUND	50X10mm	3mm
U16.5005	U16.5005 LT	TRAFOLITE	BLACK LETTERS ON WHITE BACKGROUND	50X10mm	4mm
U16.5006	U16.5006 S01	TRAFOLITE	BLACK LETTERS ON WHITE BACKGROUND	50X15mm	4mm
U16.5007	U16.5007 S02	TRAFOLITE	BLACK LETTERS ON WHITE BACKGROUND	50X10mm	4mm
U16.5008	U16.5008 L01	TRAFOLITE	BLACK LETTERS ON WHITE BACKGROUND	50X10mm	4mm
U25.5001	U25.5001 B6F1	TRAFOLITE	BLACK LETTERS ON WHITE BACKGROUND	50X15mm	4mm
U25.5002	U25.5002 B5R1	TRAFOLITE	BLACK LETTERS ON WHITE BACKGROUND	50X15mm	4mm
U25.5003	U25.5003 B6CBF	TRAFOLITE	BLACK LETTERS ON WHITE BACKGROUND	50X15mm	4mm
U25.5004	U25.5004 B6B-1	TRAFOLITE	BLACK LETTERS ON WHITE BACKGROUND	50X15mm	4mm
U25.5005	U25.5005 B6B-2	TRAFOLITE	BLACK LETTERS ON WHITE BACKGROUND	50X15mm	4mm
U29.101	U29.101 74R1/74IT1	ALUMINUM PAPER FOIL	BLACK LETTERS	50X10mm	3mm
U29.301	U29.301 74R5/74I5	ALUMINUM PAPER FOIL	BLACK LETTERS	50X10mm	3mm
U29.107	U29.107 K01M	ALUMINUM PAPER FOIL	BLACK LETTERS	50X10mm	3mm
U29.119	U29.307 TMR/B6BF1	ALUMINUM PAPER FOIL	BLACK LETTERS	50X10mm	3mm
U29.319	U29.319 TMR/B6B-1	ALUMINUM PAPER FOIL	BLACK LETTERS	50X10mm	3mm
U29.125	U29.125 TMR/B6B-2	ALUMINUM PAPER FOIL	BLACK LETTERS	50X10mm	3mm
U29.325	U29.325 R1	ALUMINUM PAPER FOIL	BLACK LETTERS	50X10mm	3mm
U29.131	U29.131 R2	ALUMINUM PAPER FOIL	BLACK LETTERS	50X10mm	3mm

AS-BUILT BY _____ DATE _____

REV. NO.	DATE	DESCRIPTION
00	13 04	FOR APPROVAL

CONTRACT NO. 11131113/00

JOB ORDER NO. S-13656

DRAWN BY RIZ CHECKED BY KVR

DATE STARTED 24.01.2013 DATE COMPLETED _____

ORG. DEPT. CTPD ENG. DEPT. AUT-PSAC

LIST OF APPARATUS

132kV UGF-8710 RELAY PANEL-1 +R03.1

S/S 8709-132/13.8KV IN AL-KHARJ CITY

RIYADH SAUDI ARABIA

الشركة الوطنية لنقل الكهرباء

نقل الكهرباء
National Grid SA

INDEX	PLANT NO.	DRAWING NUMBER	SHEET NO. SHT	SHEET NO. CONT.	REV. NO.
-	C421	CD-322917	L06	L07	00

NG/D2-D (2012/01)

DMS VECTOR NGD200

THIS DRAWING AND THE INFORMATION CONTAINED HEREIN ARE THE SOLE PROPERTY OF National Grid SA NO REPRODUCTION IN FULL OR IN PART SHALL BE OBTAINED FROM THIS DOCUMENT WITHOUT THE WRITTEN CONSENT OF ITS OWNER.

LABEL REF.	LABEL ENGRAVING	MATERIALS	ENGRAVING	LABEL SIZE	LETTER SIZE
C1	C1 127V AC SUPPLY MCB	TRAFOLITE	BLACK LETTERS ON WHITE BACKGROUND	50X15mm	4mm
C2	C2 220V AC SUPPLY MCB	TRAFOLITE	BLACK LETTERS ON WHITE BACKGROUND	50X15mm	4mm
C3	C3 THERMOSTAT	TRAFOLITE	BLACK LETTERS ON WHITE BACKGROUND	50X15mm	4mm
C7	C7 ON/OFF SWITCH	TRAFOLITE	BLACK LETTERS ON WHITE BACKGROUND	50X15mm	4mm
DS	DS DOOR SWITCH	TRAFOLITE	BLACK LETTERS ON WHITE BACKGROUND	50X15mm	4mm
IL	IL ILLUMINATION LAMP	TRAFOLITE	BLACK LETTERS ON WHITE BACKGROUND	50X15mm	4mm
SH	SH SPACE HEATER	TRAFOLITE	BLACK LETTERS ON WHITE BACKGROUND	50X15mm	4mm
U39.5001	U39.5001 Q1	TRAFOLITE	BLACK LETTERS ON WHITE BACKGROUND	50X15mm	4mm
U39.5002	U39.5002 Q2	TRAFOLITE	BLACK LETTERS ON WHITE BACKGROUND	50X15mm	4mm
U39.5003	U39.5003 C01/C02	TRAFOLITE	BLACK LETTERS ON WHITE BACKGROUND	50X15mm	4mm
U39.5004	U39.5004 TJ	TRAFOLITE	BLACK LETTERS ON WHITE BACKGROUND	50X15mm	4mm
U36.5001	U36.5001 Q3	TRAFOLITE	BLACK LETTERS ON WHITE BACKGROUND	50X15mm	4mm
U36.5002	U39.5002 Q4	TRAFOLITE	BLACK LETTERS ON WHITE BACKGROUND	50X15mm	4mm
U36.5003	U36.5003 Q5	TRAFOLITE	BLACK LETTERS ON WHITE BACKGROUND	50X15mm	4mm

THIS DRAWING AND THE INFORMATION CONTAINED HEREIN ARE THE SOLE PROPERTY OF National Grid SA NO REPRODUCTION IN FULL OR IN PART SHALL BE OBTAINED FROM THIS DOCUMENT WITHOUT THE WRITTEN CONSENT OF ITS OWNER.

AS-BUILT BY _____ DATE _____

CONTRACT NO. 11131113/00

JOB ORDER NO. S-13656

REV. NO.	DATE	DESCRIPTION
00	13 04	FOR APPROVAL

DRAWN BY RIZ CHECKED BY KVR

DATE STARTED 24.01.2013 DATE COMPLETED _____

OPRG. DEPT. CTPD ENG. DEPT. AUT-PSAC

LIST OF APPARATUS

132kV UGF-8710 RELAY PANEL-1 +R03.1

S/S 8709-132/13.8KV IN AL-KHARJ CITY

RIYADH SAUDI ARABIA

الشركة الوطنية لنقل الكهرباء

نقل الكهرباء
National Grid SA

INDEX	PLANT NO.	DRAWING NUMBER	SHEET NO. SHT	SHEET NO. CONT.	REV. NO.
-	C421	CD-322917	L07	NIL	00

NG/D2-0 (2012/01)

DMS VECTOR NGD200

POWER SYSTEMS NETWORK MANAGEMENT
PROTECTION AND SUBSTATION AUTOMATION SYSTEMS
WBS NO: S-13656

ABB AUTOMATION COMPANY LTD.,
414, AL-KHARJ ROAD
SECOND INDUSTRIAL CITY
RIYADH-11383 K.S.A

CONTRACTOR : ABB Contracting Company

CLIENT : National Grid SA

PROJECT : CONSTRUCTION OF NEW 132/13.8kV SS 8709 IN AL-KHARJ CITY

SUBSTATION : S/S 8709

CONTRACT NO. : 11131113/00

TITLE : Assembly Drawing +R03.2 [Under Ground Feeder]

REV. NO.	DATE	DESCRIPTION
00	13 04	FOR APPROVAL

AS-BUILT BY _____ DATE _____ | CONTRACT NO. 11131113/00 | JOB ORDER NO. S-13656

DRAWN BY RIZ CHECKED BY KVR
DATE STARTED 24.01.2013 DATE COMPLETED _____
ORG. DEPT. CTPD ENG. DEPT. AUT-PSAC

COVER SHEET
132kV UGF-8710 RELAY PANEL-2 +R03.2
S/S 8709-132/13.8KV IN AL-KHARJ CITY
RIYADH SAUDI ARABIA

الشركة الوطنية لنقل الكهرباء
نقل الكهرباء
National Grid SA

INDEX	PLANT NO.	DRAWING NUMBER	SHEET NO. SHT	SHEET NO. CONT.	REV. NO.
-	C421	CD-322918	G00	G01	00

NG/D2-0 (2012/01)
DMS VECTOR NGD200

THIS DRAWING AND THE INFORMATION CONTAINED HEREIN ARE THE SOLE PROPERTY OF National Grid SA NO REPRODUCTION IN FULL OR IN PART SHALL BE OBTAINED FROM THIS DOCUMENT WITHOUT THE WRITTEN CONSENT OF ITS OWNER.

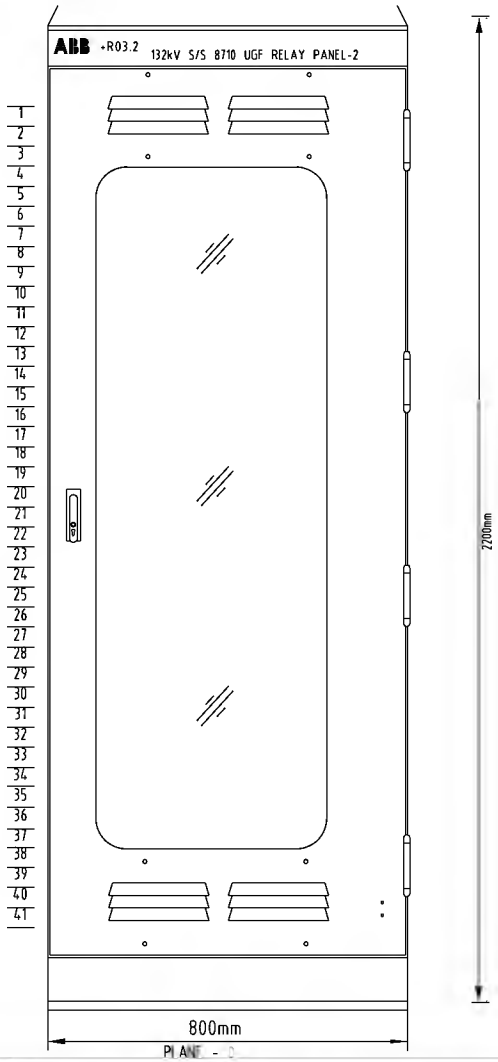

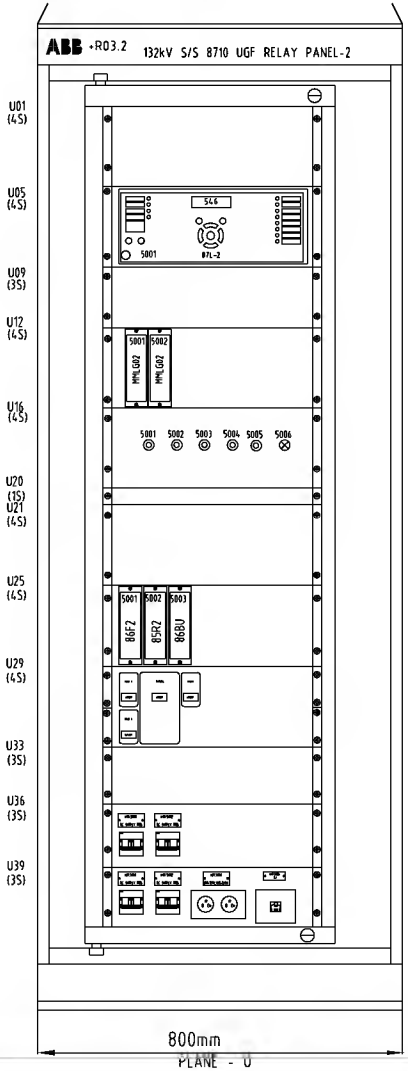

MOUNTING PLANES	
EXTERIOR COLOUR	AIRCRAFT GREY COLOUR TO SHADE NO. RAL7038
INTERIOR COLOUR	SIGNAL WHITE COLOUR TO SHADE NO. RAL9003
CUBICLE TYPE	VSH 200
FRAME	HINGED FRAME, MOVABLE
CUBICLE TYPE	FRONT ACCESS
MATERIAL OF CONSTRUCTION	ALUZINK STEEL
DIMENSIONS	2200 X 800 X 800 mm (H X W X D)
CLASS OF PROTECTION	IP 41
APPROX WEIGHT	200KG
CABLE ENTRY	BOTTOM

AS-BUILT BY _____ DATE _____ | CONTRACT NO. 11131113/00 | JOB ORDER NO. S-13656

REV. NO.	DATE	DESCRIPTION
00	13 04	FOR APPROVAL

DRAWN BY RIZ CHECKED BY KVR
DATE STARTED 24.01.2013 DATE COMPLETED _____
ORGG. DEPT. CTPD ENG. DEPT. AUT-PSAC

ASSEMBLY DRAWING
132kV UGF-8710 RELAY PANEL-2 +R03.2
S/S 8709-132/13.8KV IN AL-KHARJ CITY
RIYADH SAUDI ARABIA

الشركة الوطنية لنقل الكهرباء
نقل الكهرباء
National Grid SA

INDEX	PLANT NO.	DRAWING NUMBER	SHEET NO. SHT	SHEET NO. CONT.	REV. NO.
-	C421	CD-322918	G01	G02	00

NG/D2-0 (2012/01)
DMS VECTOR NGD200

THIS DRAWING AND THE INFORMATION CONTAINED HEREIN ARE THE SOLE PROPERTY OF National Grid SA NO REPRODUCTION IN FULL OR IN PART SHALL BE OBTAINED FROM THIS DOCUMENT WITHOUT THE WRITTEN CONSENT OF ITS OWNER.

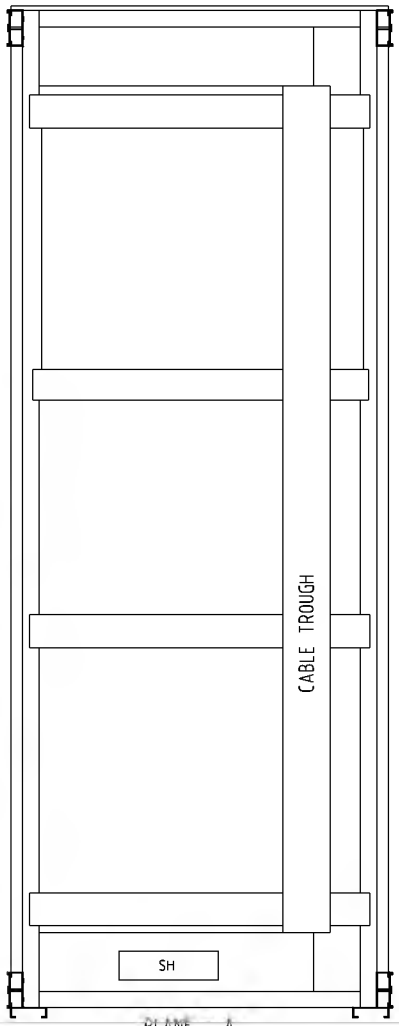

PLANE - A
800mm

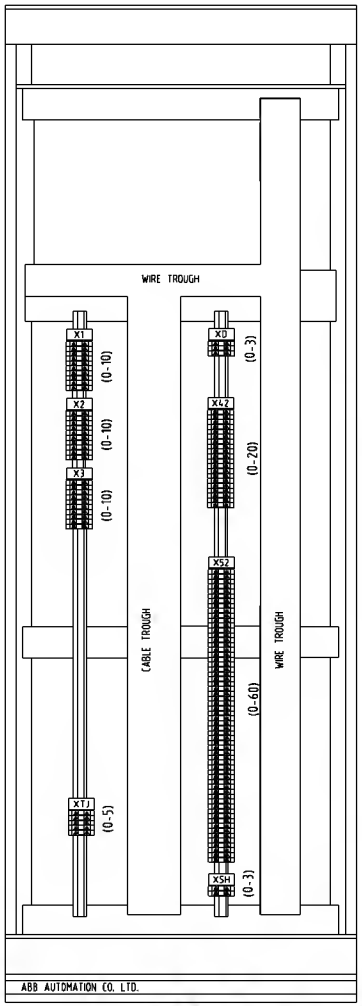

PLANE - B
800mm

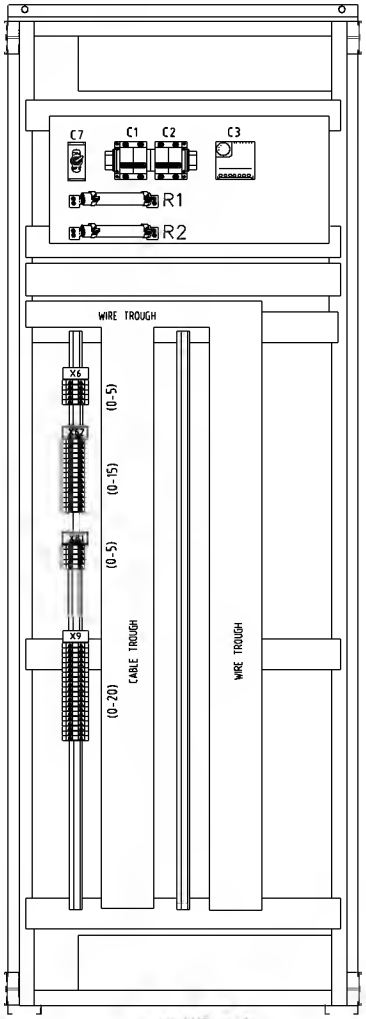

PLANE - C
800mm

PLAN-C

SCH.REF	DESCRIPTION	TYPE	MAKE
X6	ALARM SUPPLY	M6/8.RS	ENTRELEC
X62	ALARM CIRCUITS	M6/8.SNB	ENTRELEC
X9	SPARE CIRCUITS	M6/8.RS	ENTRELEC

PLAN-B

SCH.REF	DESCRIPTION	TYPE	MAKE
X1	CT CIRCUITS	OTTA 6T P/P	PHONIX
X2	VT CIRCUITS	D6/8.ST1.RS	ENTRELEC
X3	AC CIRCUITS	D6/8.ST1.RS	ENTRELEC
X42	DC CIRCUITS	D6/8.ST1.RS	ENTRELEC
X52	DC CIRCUITS	M6/8.RS	ENTRELEC
XTJ	TELEPHONE JACK	M6/8.RS	ENTRELEC
XSH	SPACE HEATER	M6/8.RS	ENTRELEC

AS-BUILT BY _____ DATE _____

REV. NO.	DATE	DESCRIPTION
00	13 04	FOR APPROVAL

CONTRACT NO. 11131113/00

JOB ORDER NO. S-13656

DRAWN BY RIZ CHECKED BY KVR

DATE STARTED 24.01.2013 DATE COMPLETED _____

OPRG. DEPT. CTPD ENG. DEPT. AUT-PSAC

ASSEMBLY DRAWING

132kV UGF-8710 RELAY PANEL-2 +R03.2

S/S 8709-132/13.8KV IN AL-KHARJ CITY

RIYADH SAUDI ARABIA

الشركة الوطنية لنقل الكهرباء

نقل الكهرباء
National Grid SA

INDEX	PLANT NO.	DRAWING NUMBER	SHEET NO. SHT	SHEET NO. CONT.	REV. NO.
-	C421	CD-322918	G02	G03	00

NG/D2-D (2012/01)

DMS VECTOR NGD200

THIS DRAWING AND THE INFORMATION CONTAINED HEREIN ARE THE SOLE PROPERTY OF National Grid SA NO REPRODUCTION IN FULL OR IN PART SHALL BE OBTAINED FROM THIS DOCUMENT WITHOUT THE WRITTEN CONSENT OF ITS OWNER.

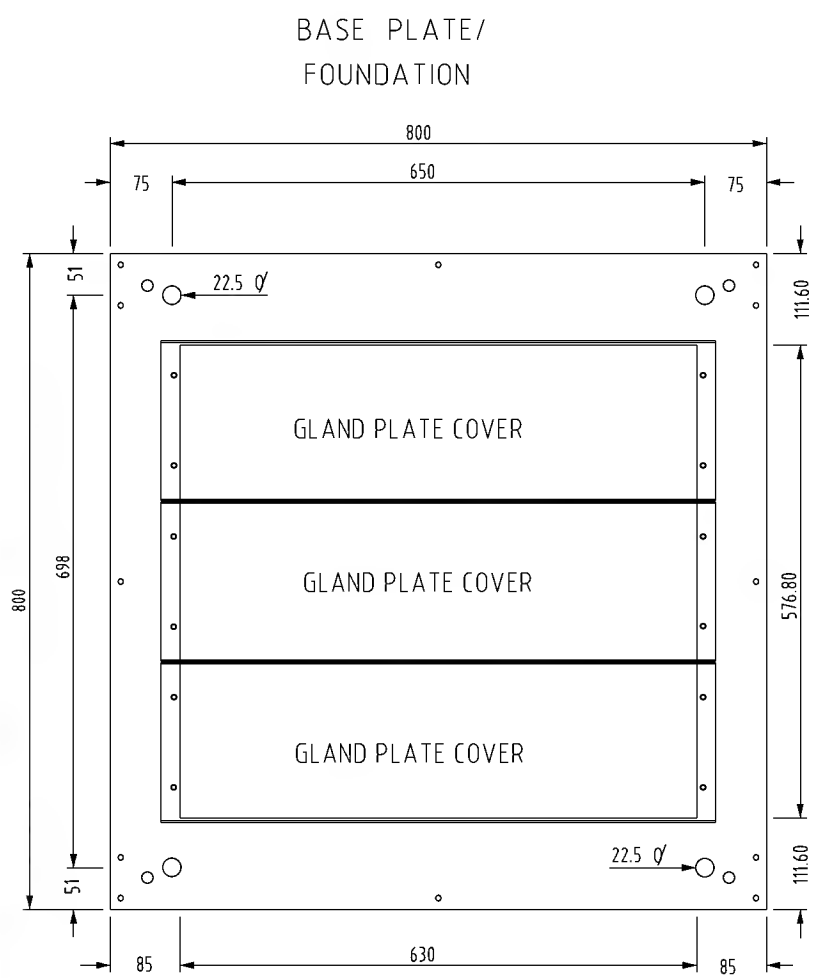

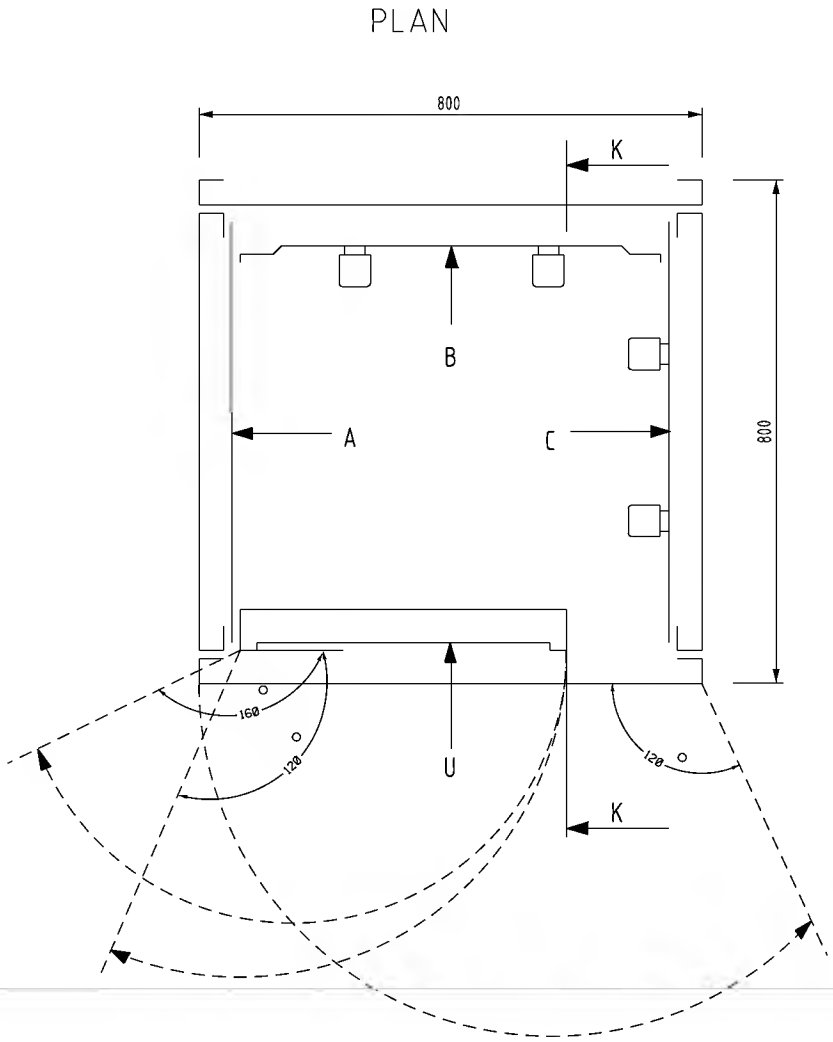

AS-BUILT BY _____ DATE _____	CONTRACT NO. 11131113/00	JOB ORDER NO. S-13656	ASSEMBLY DRAWING	نقل الكهرباء الشركة الوطنية لنقل الكهرباء National Grid SA
	DRAWN BY RIZ CHECKED BY KVR		132kV UGF-8710 RELAY PANEL-2 +R03.2	
00 / 13 04 / FOR APPROVAL	DATE STARTED 24.01.2013 DATE COMPLETED _____		S/S 8709-132/13.8KV IN AL-KHARJ CITY	
REV. NO. / DATE / DESCRIPTION	OPRG. DEPT. CTPD ENG. DEPT. AUT-PSAC		RIYADH SAUDI ARABIA	

INDEX	PLANT NO.	DRAWING NUMBER	SHEET NO. SHT	SHEET NO. CONT.	REV. NO.
-	C421	CD-322918	G03	G04	00

NG/D2-0 (2012/01)

DMS | VECTOR | NGD200

THIS DRAWING AND THE INFORMATION CONTAINED HEREIN ARE THE SOLE PROPERTY OF National Grid SA NO REPRODUCTION IN FULL OR IN PART SHALL BE OBTAINED FROM THIS DOCUMENT WITHOUT THE WRITTEN CONSENT OF ITS OWNER.

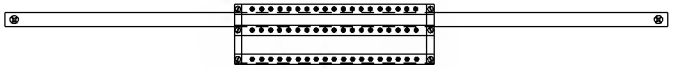

TOP VIEW FOR EARTHING BAR

U PLANE TOP LABEL

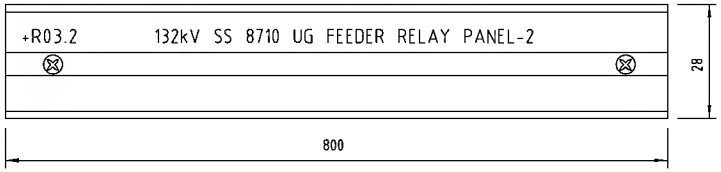

MANUFACTURING LABEL

ABB ABB Automation Co.Ltd.

PROJECT	:	National Grid SA S/S 8709
ORDER REFERENCE	:	2875 RF S13656
YEAR OF MANUFACTURE	:	2013
PANEL NO.	:	+R03.2
DRAWING NO.	:	S13656-CD-323919

MADE IN THE KINGDOM OF SAUDI ARABIA

U PLANE BOTTOM LABEL

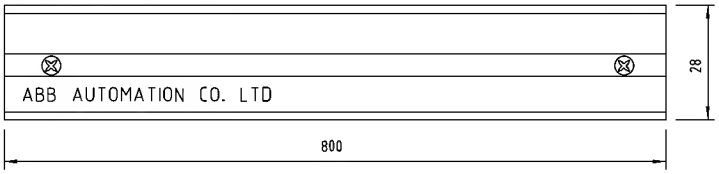

REV. NO.	DATE	DESCRIPTION
00	13 04	FOR APPROVAL

AS-BUILT BY _____ DATE _____

CONTRACT NO. 11131113/00 | JOB ORDER NO. S-13656

DRAWN BY RIZ CHECKED BY KVR

DATE STARTED 24.01.2013 DATE COMPLETED _____

ORGG. DEPT. CTPD ENG. DEPT. AUT-PSAC

ASSEMBLY DRAWING

132kV UGF-8710 RELAY PANEL-2 +R03.2

S/S 8709-132/13.8KV IN AL-KHARJ CITY

RIYADH SAUDI ARABIA

الشركة الوطنية لنقل الكهرباء

نقل الكهرباء National Grid SA

INDEX	PLANT NO.	DRAWING NUMBER	SHEET NO. SHT	SHEET NO. CONT.	REV. NO.
-	C421	CD-322918	G04	L00	00

NG/D2-0 (2012/01)

DMS VECTOR NGD200

THIS DRAWING AND THE INFORMATION CONTAINED HEREIN ARE THE SOLE PROPERTY OF National Grid SA NO REPRODUCTION IN FULL OR IN PART SHALL BE OBTAINED FROM THIS DOCUMENT WITHOUT THE WRITTEN CONSENT OF ITS OWNER.

POWER SYSTEMS NETWORK MANAGEMENT
PROTECTION AND SUBSTATION AUTOMATION SYSTEMS
WBS NO: S-13656

ABB AUTOMATION COMPANY LTD.,
414, AL-KHARJ ROAD
SECOND INDUSTRIAL CITY
RIYADH-11383 K.S.A

CONTRACTOR : ABB Contracting Company

CLIENT : National Grid SA

PROJECT : CONSTRUCTION OF NEW 132/13.8kV SS 8709 IN AL-KHARJ CITY

SUBSTATION : S/S 8709

CONTRACT NO. : 11131113/00

TITLE : LIST OF APPARATUS +R03.2 [Under Ground Feeder]

THIS DRAWING AND THE INFORMATION CONTAINED HEREIN ARE THE SOLE PROPERTY OF National Grid SA NO REPRODUCTION IN FULL OR IN PART SHALL BE OBTAINED FROM THIS DOCUMENT WITHOUT THE WRITTEN CONSENT OF ITS OWNER.

REV. NO.	DATE	DESCRIPTION
00	13 04	FOR APPROVAL

AS-BUILT BY _____ DATE _____ | CONTRACT NO. 11131113/00 | JOB ORDER NO. S-13656

DRAWN BY RIZ CHECKED BY KVR
DATE STARTED 24.01.2013 DATE COMPLETED _____
DPRG. DEPT. CTPD ENG. DEPT. AUT-PSAC

COVER SHEET
132kV UGF-8710 RELAY PANEL-2 +R03.2
S/S 8709-132/13.8KV IN AL-KHARJ CITY
RIYADH SAUDI ARABIA

الشركة الوطنية لنقل الكهرباء
نقل الكهرباء
National Grid SA

INDEX	PLANT NO.	DRAWING NUMBER	SHEET NO. SHT	SHEET NO. CONT.	REV. NO.
-	C421	CD-322918	L00	L01	00

NG/D2-0 (2012/01)
DMS VECTOR NGD200

SR. NO.	LOC. REF	SCH. REF.	DESCRIPTION	SHT	QTY.	TYPE	MAKE	ORD INFORMATION	COUNRTY OF ORIGIN
			RELAY CUBICLE- +R03.2 ACCOMODATING THE FOLLOWING		1				
1	U05.5001	87L-2	NUMERICAL HIGH SPEED CURRENT DISTANCE PROTECTION	498	1	P546	ALSTOM	P546	UK
			VERSION : 1 & 3 POLE TRIPPING/RECLOSING MHO/QUAD CHAR						
			AUX : 110V-250V DC : 100-120V						
			In/Vn : DUAL RATED CT (1/5A)						
			HARDWARE : EHTHER NET (100mbits) PLUS irig-b modulated						
			PRODUCT OPTION : CH1-1300nm SINGLE MOOE						
			CH2-1300nm SINGLE MODE						
			PROTOCOL OPTION : IEC61850+COURIER VIA REAR RS485 PORT						
			MOUNTING : 19" RACK,2A LOGICAL INPUTS,32 RELAY OUT PUTS						
			LANGUAGE : ENGLISH						
			SOFTWARE : 71						
2	U12.5001	TS-1	TEST SWITCH FOR PS46 RELAY	422	2	MMLG02	ALSTOM	MMLG02 R1AA 0001D	UK
	U12.S002	TS-2							
3	U16.S001	S03	PUSH BUTTON FOR FPSM IN_SELECTION	432	1	MP1-10B	ABB	1SFA 611 100 R1006	SWEDEN
			BUTTON COLOUR : BLACK			MCBH-20		1SFA 611 605 R1102	
			CONTACT DATA : 2NO						
4	U16.5002	S04	PUSH BUTTON FOR FPSM OUT SELECTION	432	1	MP1-10B	ABB	1SFA 611 100 R1006	SWEDEN
			BUTTON COLOUR : BLACK			MCBH-20		1SFA 611 60S R1102	
			CONTACT DATA : 2NO						
S	U16.S003	S86BU	PUSH BUTTON FOR 86BU RESET	443	1	MP1-10B	ABB	1SFA 611 100 R1006	SWEDEN
			BUTTON COLOUR : BLACK			MCBH-20		1SFA 611 60S R1102	
			CONTACT DATA : 2NO						
6	U16.S004	S86F2	PUSH BUTTON FOR 86F2 RESET	432	1	MP1-10B	ABB	1SFA 611 100 R1006	SWEDEN
			BUTTON COLOUR : BLACK			MCBH-20		1SFA 611 60S R1102	
			CONTACT DATA : 2NO						
7	U16.S00S	LT	PUSH BUTTON FOR 86F2 RESET	431	1	MP1-10B	ABB	1SFA 611 100 R1006	SWEDEN
			BUTTON COLOUR : BLACK			MCBH-20		1SFA 611 605 R1102	
			CONTACT DATA : 2NO						
8	U16.5006	L01	INDICATION LAMP OUT	431	1	MC1-100W	ABB	1SFA 611 400 R1003	SWEDEN
			LENS : WHITE			MCBH-003		1SFA 611 605 R1400	
			LENS RATING: 110-130V,4-6MA			KA2-2145		1SFA 616 921 R2145	
			HOLDER RATING :130V WITH RESISTORS DIODE BLOCK						

AS-BUILT BY _____ DATE _____

REV. NO.	DATE	DESCRIPTION
00	13 04	FOR APPROVAL

CONTRACT NO. 11131113/00 | JOB ORDER NO. S-13656

DRAWN BY RIZ CHECKED BY KVR

DATE STARTED 24.01.2013 DATE COMPLETED _____

DRG. DEPT. CTPD ENG. DEPT. AUT-PSAC

COVER SHEET

132kV UGF-8710 RELAY PANEL-2 +R03.2

S/S 8709-132/13.8KV IN AL-KHARJ CITY

RIYADH SAUDI ARABIA

الشركة الوطنية لنقل الكهرباء

نقل الكهرباء National Grid SA

INDEX	PLANT NO.	DRAWING NUMBER	SHEET NO. SHT	SHEET NO. CONT.	REV. NO.
-	C421	CD-322918	L01	L02	00

NG/D2-D (2012/01)

DMS VECTOR NGD200

THIS DRAWING AND THE INFORMATION CONTAINED HEREIN ARE THE SOLE PROPERTY OF National Grid SA NO REPRODUCTION IN FULL OR IN PART SHALL BE OBTAINED FROM THIS DOCUMENT WITHOUT THE WRITTEN CONSENT OF ITS OWNER.

SR. NO.	GA REF.	SCH. REF.	DESCRIPTION	SHEET NO.	QTY.	TYPE	MAKE	ORD INFORMATION	COUNRTY OF ORIGIN
9	U25.5001	86F2	HIGH BURDEN TYPE SELF RESET TRIP RELAY	432	1	MVAJ105	ALSTOM	MVAJ101RA0802A	UK
			TRIPPING RELAY : HIGH BURDEN TYPE						
			AUXILIARY VOLTAGE : 125VDC						
			CONTACTS 8NO+ 2NC ELECTRICAL						
			FLAG : HAND RESET						
			CONTACT MECHANISIM : HAND & ELECTRICALLY RESET						
10	U25.5002	85R2	HIGH BURDEN TYPE SELF RESET TRIP RELAY	432	1	MVAJ101	ALSTOM	MVAJ051RA0800B	UK
			AUXILIARY VOLTAGE : 110 - 125V DC						
			OUTPUT CONTACTS : 10 NO						
			OPERATION INDICATOR : SELF RESET FLAG						
11	U25.5003	86BU	HIGH BURDEN TYPE HAND / ELECTRICAL RESET TRIP RELAY	443	1	MVAJ105	ALSTOM	MVAJ105RA0802A	UK
			TRIPPING RELAY : HIGH BURDEN TYPE						
			AUXILIARY VOLTAGE : 110-125VDC						
			CONTACTS : 8NO+2NC ELECTRICAL						
			CONTACT MECHANISIM : HAND & ELECTRICALLY RESET						
			FLAG : HAND RESET						

AS-BUILT BY _____ DATE _____

REV. NO.	DATE	DESCRIPTION
00	13 04	FOR APPROVAL

CONTRACT NO. 11131113/00

JOB ORDER NO. S-13656

DRAWN BY RIZ CHECKED BY KVR

DATE STARTED 24.01.2013 DATE COMPLETED _____

DPRG. DEPT. CTPD ENG. DEPT. AUT-PSAC

LIST OF APPARATUS

132kV UGF-8710 RELAY PANEL-2 +R03.2

S/S 8709-132/13.8KV IN AL-KHARJ CITY

RIYADH SAUDI ARABIA

الشركة الوطنية لنقل الكهرباء

نقل الكهرباء National Grid SA

INDEX	PLANT NO.	DRAWING NUMBER	SHEET NO. SHT	SHEET NO. CONT.	REV. NO.
-	C421	CD-322918	L02	L03	00

NG/D2-0 (2012/01)

DMS VECTOR NGD200

THIS DRAWING AND THE INFORMATION CONTAINED HEREIN ARE THE SOLE PROPERTY OF National Grid SA NO REPRODUCTION IN FULL OR IN PART SHALL BE OBTAINED FROM THIS DOCUMENT WITHOUT THE WRITTEN CONSENT OF ITS OWNER.

SR. NO.	LOC. REF	SCH. REF.	D E S C R I P T I O N	SHT	QTY.	TYPE	MAKE	ORD INFORMATION	COUNRTY OF ORIGIN
			RELAY CUBICLE- +R03.2 ACCOMODATING THE FOLLOWING						
12	U29.101	74R2/74R3	DUAL COIL RELAY FOR + R2/R3 DC SUPERVISION	432,443	2	RXSF 1	ABB	RK 271 019-AN	SWEDEN
	U29.119	74IT2	AUXILIARY VOLTAGE : 110-125VDC	433					
			CONTACT DATA : 1NO + 2NC PER COIL						
13	U29.107	K01S	BISTABLE RELAY FOR "IN/OUT SELECTION"	432	1	RXMVB4	ABB	1MRK 251 401 AP	SWEDEN
			AUXILIARY VOLTAGE : 110 - 125V DC						
			OUTPUT CONTACTS : 7NO + 7NC						
14	U29.301	TMR/86F2	DELAY ON PICKUP DELAY FOR RESET 86F2	432	1	RXKL1	ABB	1MRK 000-066-AB	SWEDEN
			AUXILIARY VOLTAGE : 110-125VDC						
			CONTACT DATA : 2NO + 2NC PER COIL						
			TIMER RANGE : 20MS-99 hrs						

REV. NO.	DATE	DESCRIPTION
00	13 04	FOR APPROVAL

AS-BUILT BY _____ DATE _____

CONTRACT NO. 11131113/00 JOB ORDER NO. S-13656

DRAWN BY RIZ CHECKED BY KVR

DATE STARTED 24.01.2013 DATE COMPLETED _____

DPRG. DEPT. CTPD ENG. DEPT. AUT-PSAC

LIST OF APPARATUS

132kV UGF-8710 RELAY PANEL-2 +R03.2

S/S 8709-132/13.8KV IN AL-KHARJ CITY

RIYADH SAUDI ARABIA

الشركة الوطنية لنقل الكهرباء

نقل الكهرباء National Grid SA

INDEX	PLANT NO.	DRAWING NUMBER	SHEET NO. SHT	SHEET NO. CONT.	REV. NO.
-	C421	CD-322918	L03	L04	00

NG/D2-0 (2012/01)

DMS VECTOR NGD200

THIS DRAWING AND THE INFORMATION CONTAINED HEREIN ARE THE SOLE PROPERTY OF National Grid SA NO REPRODUCTION IN FULL OR IN PART SHALL BE OBTAINED FROM THIS DOCUMENT WITHOUT THE WRITTEN CONSENT OF ITS OWNER.

SR. NO.	GA REF.	SCH. REF.	D E S C R I P T I O N	SHEET NO.	QTY.	TYPE	MAKE	ORDERING INFORMATION	COUNTRY OF ORIGIN
15			MCB 2 POLE 6A, FOR DC SUPPLY	416	2	S 282 UC-K6	ABB	GH S282 0164 R0377	GERMANY
			WITH 2NC AUXILIARY CONTACT			S2-H02		GH S270 1916 R0003	
	U39.5001	Q1	Q1 R2+_ SUPPLY						
	U39.5002	Q2	Q2 R3 +_ SUPPLY						
	U36.5001	Q3	Q3 IT2+ SUPPLY						
	U36.5002	Q4	Q4 TC2 + SUPPLY						
									FRANCE
16	U39.5003	C01	CONVENIENCE OUTLET 10A, 127V AC	411	1	USM45 &	LEGRAND	74140 & 74180	
		C02	CONVENIENCE OUTLET 10A, 220V AC			USMS45			
		C1,C2	MINIATURE CIRCUIT BREAKER, 2 POLE, 10A FOR	411	2	S202-C10	ABB	2CDS 253 001 R0104	GERMANY
			CONVENIENCE OUTLET WITH AUXILIARY SWITCH, 1NO + 1NC CONTACTS			S2C-H11L		2CDS 200 936 R0001	
17		C3	THERMOSTAT FOR SPACE HEATER, 5-60 C°	411	1	SK 3110	RITTAL	SK 3110	THIWAN
18	U39.5004	TJ	TELEPHONE JACK 1GANG 4WIRE	411	1	EDF410	EDISON	EDF410	SWEDEN
19		C7	ON/OFF SWITCH FOR SPACE HEATER	411	1	M2SS1-10B	ABB	1SFA 611 200 R1006	
						MCBH-10		1SFA 611 605 R1101	
20		DS	DOOR SWITCH FOR CONTROL OF CUBICLE INTERNAL ILLUMINATION LAMP	411	1	LS30P	ABB	1SBV 010213 R1202	SWEDEN
21		IL	INTERNAL ILLUMINATION CUBICLE LAMP SUITABLE FOR	411	1	T-4	SUNON	SP-20W	
			127V AC, 60Hz SUPPLY, 20W						
22		SH	SPACE HEATER, 150W, 120V, 60Hz	411	1	MICA	GRUPPO	1FZEK 006 C001	ITALY
23		R1	FIXED RESISTOR FOR TRIP CIRCUIT SUPERVISION CKT.	491	2	GRF 30/200	DANOTHERM	GRF 30/200	GERMANY
		R2	2.5Kohm,15W						

REV. NO.	DATE	DESCRIPTION
00	13 04	FOR APPROVAL

AS-BUILT BY _____ DATE _____

CONTRACT NO. 11131113/00 | JOB ORDER NO. S-13656

DRAWN BY RIZ CHECKED BY KVR

DATE STARTED 24.01.2013 DATE COMPLETED _____

DPRG. DEPT. CTPD ENG. DEPT. AUT-PSAC

LIST OF APPARATUS

132kV UGF-8710 RELAY PANEL-2 +R03.2

S/S 8709-132/13.8KV IN AL-KHARJ CITY

RIYADH SAUDI ARABIA

الشركة الوطنية لنقل الكهرباء

نقل الكهرباء National Grid SA

INDEX	PLANT NO.	DRAWING NUMBER	SHEET NO. SHT	SHEET NO. CONT.	REV. NO.
-	C421	CD-322918	L04	L05	00

NG/D2-0 (2012/01)

DMS VECTOR NGD200

THIS DRAWING AND THE INFORMATION CONTAINED HEREIN ARE THE SOLE PROPERTY OF National Grid SA NO REPRODUCTION IN FULL OR IN PART SHALL BE OBTAINED FROM THIS DOCUMENT WITHOUT THE WRITTEN CONSENT OF ITS OWNER.

SR. NO.	ITEM DESIGNATION	D E S C R I P T I O N	SHEET.ND.	QTY.	TYPE	MAKE	ORDERING INFORMATION	COUNTRY OF ORIGIN
24	X1	BOLT CONNECTING TERMINAL BLOCKS FOR DISCONNECTABLE CT CIRCUITS	S01	10	DTTA 6T P/P	PHOENIX	0790462	GERMANY
	X2	SPRING LOADED TERMINAL BLOCKS FOR DISCONNECTABLE VT CIRCUITS	S01	S	D6/8.5T1.R5	ENTRELEC	15NA 115 B31 R0400	FRANCE
	X3	SPRING LOADED TERMINAL BLOCKS FOR DISCONNECTABLE AC CIRCUITS	S01	10	D6/8.5T1.R5	ENTRELEC	15NA 115 831 R0400	FRANCE
	X42	SPRING LOADED TERMINAL BLOCK FOR DISCONNECTABLE DC CIRCUITS	S01	S0	D6/8.ST1.R5	ENTRELEC	15NA 115 831 R0400	FRANCE
	XS2	SPRING LOADED TERMINAL BLOCK FOR DC PROTN. CIRCUITS	S01	50	M6/8.R5	ENTRELEC	15NA 115 6BB R2500	FRANCE
	X62,X6	KNIFE TYPE TERMINAL BLOCKS FOR COMMON ALARM CIRCUITS	S01	15,S	M6/8.5N8	ENTRELEC	15NA 115 6B5 R1200	FRANCE
	X9	SPRING LOADED TERMINAL BLOCKS FOR SPARE CIRCITS	S01	15	M6/8.R5	ENTRELEC	15NA 115 688 R2500	FRANCE
	XTJ	SPRING LOADED TERMINAL BLOCKS FOR TELEPHONE JACK	S01	S	M6/8.R5	ENTRELEC	15NA 115 6BB R2500	FRANCE
	XSH	SPRING LOADED TERMINAL BLOCKS FOR SPACE HEATER	S01	3	M6/8.R5	ENTRELEC	15NA 115 688 R2500	FRANCE
	XD	TERMINAL BLOCKS WITH BLOCKING DIODE	S01	3	N4/6.5	ENTRELEC	11521310	FRANCE
					IN540B	MEJDAF	02-049	
					V150ZA1	R5	239-270	

AS-BUILT BY _____ DATE _____ | CONTRACT NO. 11131113/00 | JOB ORDER NO. S-13656

REV. NO.	DATE	DESCRIPTION
00	13 04	FOR APPROVAL

DRAWN BY RIZ CHECKED BY KVR
DATE STARTED 24.01.2013 DATE COMPLETED _____
OPRG. DEPT. CTPD ENG. DEPT. AUT-PSAC

LIST OF APPARATUS
132kV UGF-8710 RELAY PANEL-2 +R03.2
S/S 8709-132/13.8KV IN AL-KHARJ CITY
RIYADH SAUDI ARABIA

الشركة الوطنية لنقل الكهرباء
نقل الكهرباء
National Grid SA

INDEX	PLANT NO.	DRAWING NUMBER	SHEET NO. SHT	SHEET NO. CONT.	REV. NO.
-	C421	CD-322918	L05	L06	00

NG/D2-D (2012/01)
DMS VECTOR NGD200

THIS DRAWING AND THE INFORMATION CONTAINED HEREIN ARE THE SOLE PROPERTY OF National Grid SA NO REPRODUCTION IN FULL OR IN PART SHALL BE OBTAINED FROM THIS DOCUMENT WITHOUT THE WRITTEN CONSENT OF ITS OWNER.

LABEL REF.	LABEL ENGRAVING	MATERIALS	ENGRAVING	LABEL SIZE	LETTER SIZE
U05.5001	U05.5001 87L-2	ALUMINUM PAPER FOIL	BLACK LETTERS	50X10mm	3mm
U12.5001	U12.5001 TS-1	ALUMINUM PAPER FOIL	BLACK LETTERS	50X15mm	4mm
U12.5002	U12.5002 TS-2	ALUMINUM PAPER FOIL	BLACK LETTERS	50X15mm	4mm
U16.5001	U16.5001 S03	TRAFOLITE	BLACK LETTERS ON WHITE BACKGROUND	50X15mm	4mm
U16.5002	U16.5002 S04	TRAFOLITE	BLACK LETTERS ON WHITE BACKGROUND	50X15mm	4mm
U16.5003	U16.5003 586BU	TRAFOLITE	BLACK LETTERS ON WHITE BACKGROUND	50X15mm	4mm
U16.5004	U16.5004 586F2	TRAFOLITE	BLACK LETTERS ON WHITE BACKGROUND	50X10mm	3mm
U16.5005	U16.5005 LT	TRAFOLITE	BLACK LETTERS ON WHITE BACKGROUND	50X10mm	4mm
U16.5006	U16.5006 L01	TRAFOLITE	BLACK LETTERS ON WHITE BACKGROUND	50X10mm	4mm
U25.5001	U25.5001 86F2	TRAFOLITE	BLACK LETTERS ON WHITE BACKGROUND	50X10mm	4mm
U25.5002	U25.5002 85R2	TRAFOLITE	BLACK LETTERS ON WHITE BACKGROUND	50X10mm	4mm
U25.5003	U25.5003 86BU	TRAFOLITE	BLACK LETTERS ON WHITE BACKGROUND	50X10mm	4mm
U29.101	U29.101 74R2/74R3	ALUMINUM PAPER FOIL	BLACK LETTERS	50X10mm	3mm
U29.107	U29.107 K01S	ALUMINUM PAPER FOIL	BLACK LETTERS	50X10mm	3mm
U29.301	U29.301 TMR/86F2	ALUMINUM PAPER FOIL	BLACK LETTERS	50X10mm	3mm
U29.125	U29.125 74IT2	ALUMINUM PAPER FOIL	BLACK LETTERS	50X10mm	3mm
U29.119	U29.119 R1	ALUMINUM PAPER FOIL	BLACK LETTERS	50X10mm	3mm
U29.319	U29.319 R2	ALUMINUM PAPER FOIL	BLACK LETTERS	50X10mm	3mm

AS-BUILT BY _____ DATE _____ | CONTRACT NO. 11131113/00 | JOB ORDER NO. S-13656

REV. NO.	DATE	DESCRIPTION
00	13 04	FOR APPROVAL

DRAWN BY RIZ CHECKED BY KVR
DATE STARTED 24.01.2013 DATE COMPLETED _____
ORG. DEPT. CTPD ENG. DEPT. AUT-PSAC

LIST OF APPARATUS
132kV UGF-8710 RELAY PANEL-2 +R03.2
S/S 8709-132/13.8KV IN AL-KHARJ CITY
RIYADH SAUDI ARABIA

الشركة الوطنية لنقل الكهرباء
نقل الكهرباء
National Grid SA

INDEX	PLANT NO.	DRAWING NUMBER	SHEET NO. SHT	SHEET NO. CONT.	REV. NO.
-	C421	CD-322918	L06	L07	00

NG/D2-0 (2012/01)
DMS VECTOR NGD200

THIS DRAWING AND THE INFORMATION CONTAINED HEREIN ARE THE SOLE PROPERTY OF National Grid SA NO REPRODUCTION IN FULL OR IN PART SHALL BE OBTAINED FROM THIS DOCUMENT WITHOUT THE WRITTEN CONSENT OF ITS OWNER.

LABEL REF.	LABEL ENGRAVING	MATERIALS	ENGRAVING	LABEL SIZE	LETTER SIZE
C1	C1 127V AC SUPPLY MCB	TRAFOLITE	BLACK LETTERS ON WHITE BACKGROUND	50X15mm	4mm
C2	C2 220V AC SUPPLY MCB	TRAFOLITE	BLACK LETTERS ON WHITE BACKGROUND	50X15mm	4mm
C3	C3 THERMOSTAT	TRAFOLITE	BLACK LETTERS ON WHITE BACKGROUND	50X15mm	4mm
C7	C7 ON/OFF SWITCH	TRAFOLITE	BLACK LETTERS ON WHITE BACKGROUND	50X15mm	4mm
DS	DS DOOR SWITCH	TRAFOLITE	BLACK LETTERS ON WHITE BACKGROUND	50X15mm	4mm
IL	IL ILLUMINATION LAMP	TRAFOLITE	BLACK LETTERS ON WHITE BACKGROUND	50X15mm	4mm
SH	SH SPACE HEATER	TRAFOLITE	BLACK LETTERS ON WHITE BACKGROUND	50X15mm	4mm
U39.5001	U39.5001 O1	TRAFOLITE	BLACK LETTERS ON WHITE BACKGROUND	50X15mm	4mm
U39.5002	U39.5002 O2	TRAFOLITE	BLACK LETTERS ON WHITE BACKGROUND	50X15mm	4mm
U39.5003	U39.5003 CO1/CO2	TRAFOLITE	BLACK LETTERS ON WHITE BACKGROUND	50X15mm	4mm
U39.5004	U39.5004 TJ	TRAFOLITE	BLACK LETTERS ON WHITE BACKGROUND	50X15mm	4mm
U36.5001	U36.5001 Q3	TRAFOLITE	BLACK LETTERS ON WHITE BACKGROUND	50X15mm	4mm
U36.5002	U39.5002 Q4	TRAFOLITE	BLACK LETTERS ON WHITE BACKGROUND	50X15mm	4mm

AS-BUILT BY _____ DATE _____ | CONTRACT NO. 11131113/00 | JOB ORDER NO. S-13656

REV. NO.	DATE	DESCRIPTION
00	13 04	FOR APPROVAL

DRAWN BY RIZ CHECKED BY KVR

DATE STARTED 24.01.2013 DATE COMPLETED _____

DPRG. DEPT. CTPD ENG. DEPT. AUT-PSAC

LIST OF APPARATUS

132kV UGF-8710 RELAY PANEL-2 +R03.2

S/S 8709-132/13.8KV IN AL-KHARJ CITY

RIYADH SAUDI ARABIA

الشركة الوطنية لنقل الكهرباء

نقل الكهرباء National Grid SA

INDEX	PLANT NO.	DRAWING NUMBER	SHEET NO. SHT	SHEET NO. CONT.	REV. NO.
-	C421	CD-322918	L07	NIL	00

NG/D2-0 (2012/01)

DMS VECTOR NGD200

THIS DRAWING AND THE INFORMATION CONTAINED HEREIN ARE THE SOLE PROPERTY OF National Grid SA NO REPRODUCTION IN FULL OR IN PART SHALL BE OBTAINED FROM THIS DOCUMENT WITHOUT THE WRITTEN CONSENT OF ITS OWNER.

POWER SYSTEMS NETWORK MANAGEMENT
PROTECTION AND SUBSTATION AUTOMATION SYSTEMS
WBS NO: S-13656

ABB AUTOMATION COMPANY LTD.,
414, AL-KHARJ ROAD
SECOND INDUSTRIAL CITY
RIYADH-11383 K.S.A

CONTRACTOR : ABB Contracting Company

CLIENT : National Grid SA

PROJECT : CONSTRUCTION OF NEW 132/13.8kV SS 8709 IN AL-KHARJ CITY

SUBSTATION : S/S 8709

CONTRACT NO. : 11131113/00

TITLE : SCHEMATICS DRAWINGS (Under Ground Feeder)

AS-BUILT BY _____ DATE _____	CONTRACT NO. 11131113/00	JOB ORDER NO. S-13656	
00 / 13 04 / FOR APPROVAL (REV. NO. / DATE / DESCRIPTION)	DRAWN BY RIZ CHECKED BY KVR	DATE STARTED 24.01.2013 DATE COMPLETED _____	OPRG. DEPT. CTPD ENG. DEPT. AUT-PSAC

COVER SHEET
132kV UGF-8710 RELAY PANEL-1/2
S/S 8709-132/13.8KV IN AL-KHARJ CITY
RIYADH SAUDI ARABIA

الشركة الوطنية لنقل الكهرباء
نقل الكهرباء
National Grid SA

INDEX	PLANT NO.	DRAWING NUMBER	SHEET NO. SHT	SHEET NO. CONT.	REV. NO.
-	C421	CD-322919	000	001	00

NG/D2-0 (2012/01)
DMS VECTOR NGD200

THIS DRAWING AND THE INFORMATION CONTAINED HEREIN ARE THE SOLE PROPERTY OF National Grid SA NO REPRODUCTION IN FULL OR IN PART SHALL BE OBTAINED FROM THIS DOCUMENT WITHOUT THE WRITTEN CONSENT OF ITS OWNER.

CONTENTS	ABB SHT.NO.	REV.00	REV.01	REV.02
COVER SHEET	000	X		
CONTENTS SHEET	001	X		
CONTENTS SHEET	002	X		
GRAPHICAL SYMBOLS FOR DIAGRAMS	011	X		
GRAPHICAL SYMBOLS FOR DIAGRAMS	012	X		
COMMON LEGEND	013	X		
FERULE AND WIRING DETAILS	014	X		
DRAWING REFERENCE	015	X		
DRAWING REFERENCE	016	X		
PRIMARY SYSTEM	051-052	X		
AC SUPPLY FOR ILLUMINATION & POWER SOCKET	211	X		
AC MCB AUX CONTACTS	212	X		
DC SUPPLY DISTRIBUTION	216	X		
CURRENT TRANSFORMER INPUTS -87L-1	221	X		
VOLTAGE TRANSFORMER INPUTS - 87L-1	222	X		
COMMUNICATION CIRCUITS	223	X		
MAIN-1 PROT. 87L-1 RELAY - BINARY INPUTS	231	X		
MAIN-1 CABLE DIFFL. PROTECTION TRIP RELAY CKT.	232	X		
MAIN-1 INTER TRIP RELAY CKT.	233	X		
COMMUNICATION INTERFACE	246	X		
CBF-1/2 & BUSBAR PROTN-1 TRIP RELAY CIRCUIT	276	X		
BUSBAR PROTN-2 TRIP RELAY CIRCUIT	277	X		
MAIN-1 INDICATION CIRCUIT	278	X		
TRIP COIL-1 SUPERVISION CIRCUIT	291	X		
TRIP COIL-2/DELAYTRIP/CBF INITIATION CONTACTS	292	X		

CONTENTS	ABB SHT.NO.	REV.00	REV.01	REV.02
CLOSE BLOCK CIRCUIT	293	X		
COMMON ALARM CIRCUITS	294	X		
SPARE CONTACTS	295	X		
BLOCK REFERENCE (TRM MODULE)	298	X		
BLOCK REFERENCE (BI)	299	X		
BLOCK REFERENCE (BO)	300	X		
TERMINAL BLOCKS PANEL +R03.1	301	X		

REV. NO.	DATE	DESCRIPTION
00	13 04	FOR APPROVAL

AS-BUILT BY _____ DATE _____

CONTRACT NO. 11131113/00 JOB ORDER NO. S-13656

DRAWN BY RIZ CHECKED BY KVR

DATE STARTED 24.01.2013 DATE COMPLETED _____

DPRG. DEPT. CTPD ENG. DEPT. AUT-PSAC

CONTENTS SHEET

132kV UGF-8710 RELAY PANEL-1/2

S/S 8709-132/13.8KV IN AL-KHARJ CITY

RIYADH SAUDI ARABIA

الشركة الوطنية لنقل الكهرباء

نقل الكهرباء National Grid SA

INDEX	PLANT NO.	DRAWING NUMBER	SHEET NO. SHT	SHEET NO. CONT.	REV. NO.
-	C421	CD-322919	001	002	00

NG/D2-0 (2012/01)

DMS VECTOR NGD200

THIS DRAWING AND THE INFORMATION CONTAINED HEREIN ARE THE SOLE PROPERTY OF National Grid SA NO REPRODUCTION IN FULL OR IN PART SHALL BE OBTAINED FROM THIS DOCUMENT WITHOUT THE WRITTEN CONSENT OF ITS OWNER.

CONTENTS	ABB SHT.NO.	REV.00	REV.01	REV.02
AC SUPPLY FOR ILLUMINATION & POWER SOCKET	411	X		
AC MCB AUX CONTACTS	412	X		
AC MCB AUX CONTACTS	416	X		
CURRENT TRANSFORMER INPUTS -87L-2	421	X		
VOLTAGE TRANSFORMER INPUTS - 87L-2	422	X		
COMMUNICATION CIRCUIT - 87L2	423	X		
MAIN-2 PROT. 87L-2 RELAY BINARY INPUTS	431	X		
MAIN-2 DIFF. PROTECTION TRIP RELAY CKT.	432	X		
MAIN-2 INTERTRIP RELAY CKT.	433	X		
BACKUP PROTECTION TRIP RELAY CIRCUIT	443	X		
OPTICAL / ELECTRICAL INTERFACE	446	X		
MAIN-2 INDICATION CKT.	478	X		
TRIP COIL-2 SUPERVISION CIRCUIT	491	X		
TRIP COIL-1 & CBF INITIATION CONTACTS	492	X		
CLOSING CIRCUIT	493	X		
COMMON ALARM CIRCUITS	494	X		
SPARE CONTACTS	495	X		
BLOCK REFERENCE-87L-2	498	X		
BLOCK REFERENCE-87L-2	499	X		
TERMINAL BLOCKS REFERENCE +R03.2	501	X		

AS-BUILT BY _____ DATE _____ | CONTRACT NO. 11131113/00 | JOB ORDER NO. S-13656

REV. NO.	DATE	DESCRIPTION
00	13 04	FOR APPROVAL

DRAWN BY RIZ CHECKED BY KVR
DATE STARTED 24.01.2013 DATE COMPLETED _____
ORIG. DEPT. CTPD ENG. DEPT. AUT-PSAC

CONTENTS SHEET
132kV UGF-8710 RELAY PANEL-1/2
S/S 8709-132/13.8KV IN AL-KHARJ CITY
RIYADH SAUDI ARABIA

الشركة الوطنية لنقل الكهرباء
نقل الكهرباء
National Grid SA

INDEX	PLANT NO.	DRAWING NUMBER	SHEET NO. SHT	SHEET NO. CONT.	REV. NO.
-	C421	CD-322919	002	011	00

NG/D2-0 (2012/01)
DMS VECTOR NGD200

THIS DRAWING AND THE INFORMATION CONTAINED HEREIN ARE THE SOLE PROPERTY OF National Grid SA NO REPRODUCTION IN FULL OR IN PART SHALL BE OBTAINED FROM THIS DOCUMENT WITHOUT THE WRITTEN CONSENT OF ITS OWNER.

SYMBOL	DESCRIPTION
	FRAME CONNECTION
	EARTH CONNECTION
	RESISTOR
	VARIABLE RESISTOR
	RESISTOR WITH PRESET ADJUSTMENT
	CAPACITOR
	SEMICONDUCTOR DIODE USED AS A CAPACITIVE DEVICE
	OPEN CONTACT, MAKE CONTACT
	CLOSED CONTACT, BREAK CONTACT
	CHANGE-OVER CONTACT, BREAK BEFORE MAKE
	MAKE CONTACT WHICH IS EARLY WHEN OPERATING AND LATE WHEN RELEASING
	BREAK CONTACT WHICH IS LATE WHEN OPERATING AND EARLY WHEN RELEASING
	SWITCHING DEVICE WITH MANUAL CONTROL
	MAKE CONTACT DELAYED WHEN OPERATING
	BREAK CONTACT DELAYED WHEN RELEASING
	MAKE CONTACT DELAYED WHEN OPERATING AND RELEASING
	MAIN CONTACT OF A SWITCH DISCONNECTOR
	MAIN CONTACT OF A DISCONNECTOR

SYMBOL	DESCRIPTION
	MAIN CONTACT OF A CIRCUIT BREAKER
	PASSING MAKE CONTACT CLOSING MOMENTARILY DURING OPERATION AND RELEASE
	BREAK CONTACT DELAYED WHEN OPERATING
	MAKE CONTACT DELAYED WHEN RELEASING
	TWO MECHANICAL LINKS CROSSING WITHOUT CONNECTION
	JUNCTION OF MECHANICAL LINKS
	AUTOMATIC RESET
	NON-AUTOMATIC RESET
	SWITCHING DEVICE WITH MANUAL OPERATION AND WITH AUTOMATIC RESET
	SWITCHING DEVICE WITH MANUAL OPERATION AND WITH NON-AUTOMATIC RESET
	CHANGE-OVER SWITCHING DEVICE WITH MANUAL CONTROL AUTOMATIC RESET FROM POSITION 1-2 TO THE NEUTRAL POSITION
	RELAY WITH MAKE CONTACT
	RELAY WITH CHANGE-OVER CONTACT
	RELAY WITH MAKE CONTACT, DELAYED WHEN OPERATING
	RELAY WITH MAKE CONTACT, DELAYED WHEN RELEASING
	RELAY WITH MAKE CONTACT, DELAYED WHEN OPERATING AND RELEASING

SYMBOL	DESCRIPTION
	RELAY WITH TWO MAKE CONTACTS, ONE OF THEM DELAYED WHEN OPERATING
	RELAY WITH TWO ACTUATORS AND A TWO STABLE POSITIONS
	SIGNALLING LAMP
	MECHANICAL INDICATOR WITH AUTOMATIC RESET
	MECHANICAL INDICATOR WITH NON-AUTOMATIC RESET
	ELECTRICALLY CONTROLLED MECHANICAL INDICATOR WITH AUTOMATIC RESET
	ELECTRICALLY CONTROLLED MECHANICAL INDICATOR WITH NON-AUTOMATIC RESET
	RELAY WITH MECHANICAL INDICATOR
	ELECTRO-MECHANICAL POSITION INDICATOR WITH ONE DE-ENERGIZED AND ONE OPERATED POSITION
	ELECTRO-MECHANICAL POSITION INDICATOR WITH ONE DE-ENERGIZED AND TWO OPERATED POSITION
	BELL, BUZZER
	SIREN , HORN

AS-BUILT BY _____ DATE _____	CONTRACT NO. 11131113/00	JOB ORDER NO. S-13656	
	DRAWN BY RIZ	CHECKED BY KVR	
00 / 13 04 / FOR APPROVAL	DATE STARTED 24.01.2013	DATE COMPLETED _____	
REV. NO. / DATE / DESCRIPTION	OPRG. DEPT. CTPD	ENG. DEPT. AUT-PSAC	

GRAPHICAL SYMBOLS FOR DIAGRAMS

132kV UGF-8710 RELAY PANEL-1/2

S/S 8709-132/13.8KV IN AL-KHARJ CITY

RIYADH SAUDI ARABIA

الشركة الوطنية لنقل الكهرباء

نقل الكهرباء National Grid SA

INDEX	PLANT NO.	DRAWING NUMBER	SHEET NO. SHT	SHEET NO. CONT.	REV. NO.
-	C421	CD-322919	011	012	00

NG/D2-D (2012/01)

DMS | VECTOR | NGD200

THIS DRAWING AND THE INFORMATION CONTAINED HEREIN ARE THE SOLE PROPERTY OF National Grid SA NO REPRODUCTION IN FULL OR IN PART SHALL BE OBTAINED FROM THIS DOCUMENT WITHOUT THE WRITTEN CONSENT OF ITS OWNER.

SYMBOL	DESCRIPTION
	FUSE / LINK
	FUSE WITH THE SUPPLY SIDE INDICATED
	SINGLE-PHASE TRANSFORMER WITH TWO SEPARATE WINDINGS (TWO ALTERNATIVE FORMS)
	SINGLE-PHASE TRANSFORMER WITH THREE SEPARATE WINDINGS (TWO ALTERNATIVE FORMS)
	SINGLE-PHASE TRANSFORMER WITH FERRO MAGNETIC CORE
	SINGLE-PHASE VOLTAGE TRANSFORMER (MULTI-LINE AND SINGLE-LINE REPRESENTATION)
	SINGLE-PHASE VOLTAGE TRANSFORMER WITH TWO SECONDARY WINDINGS (MULTI-LINE AND SINGLE-LINE REPRESENTATION)
	CURRENT TRANSFORMER (MULTI-LINE AND SINGLE-LINE REPRESENTATION)
	CURRENT TRANSFORMER WITH TWO CORES (MULIT-LINE AND SINGLE-LINE REPRESENTATION)
	CURRENT TRANSFORMER WITH TWO SECONDARY WINDINGS ON ONE CORE (MULTI-LINE AND SINGLE-LINE REPRESENTATION)
~	FILTER
~	HIGH-PASS FILTER
~	BAND-PASS FILTER
V	VOLTMETER
A	AMMETER

SYMBOL	DESCRIPTION
W	WATTMETER
Var	VARMETER
PF	POWER FACTOR METER
/	POSITION INDICATOR
	SYNCHROSCOPE
V	RECORDING VOLTMETER
W	RECORDING WATTMETER
h	HOUR METER
Wh	WATT-HOUR METER
Wh	WATT-HOUR METER FOR ENERGY FROM A BUSBAR SYSTEM
	ELEMENT WITH STATIC INPUT
	ELEMENT WITH STATIC NEGATED INPUT
	ELEMENT WITH STATIC NEGATED OUTPUT
>	ELEMENT WITH DYNAMIC INPUT
>	ELEMENT WITH DYNAMIC NEGATED INPUT
	ELEMENT WITH INHIBITING INPUT

SYMBOL	DESCRIPTION
	ELEMENT WITH NEGATED INHIBITING INPUT
	ELEMENT WITH INPUT WHICH DOES NOT CARRY ANY LOGIC INFORMATION
X|	ELEMENT WITH POSTPONED OUTPUT
&	AND-ELEMENT WITH TWO INPUTS
≥1	OR-ELEMENT WITH TWO INPUTS
≥2	LOGIC THRESHOLD ELEMENT WITH FOUR INPUTS AND THRESHOLD VALUE 2
=2	ELEMENT WITH THREE INPUTS FOR "2 AND ONLY 2"
=1	EXCLUSIVE OR-ELEMENT WITH THREE INPUTS
=	LOGIC IDENTITY ELEMENT WITH THREE INPUTS
>n/2	MAJORITY ELEMENT WITH THREE INPUTS
1	NEGATOR
&	NAND ELEMENT WITH TWO INPUTS
≥1	NOR ELEMENT WITH TWO INPUTS
X Y	BISTABLE ELEMENT

AS-BUILT BY _____ DATE _____ | CONTRACT NO. 11131113/00 | JOB ORDER NO. S-13656

REV. NO.	DATE	DESCRIPTION
00	13 04	FOR APPROVAL

DRAWN BY RIZ CHECKED BY KVR
DATE STARTED 24.01.2013 DATE COMPLETED _____
DPRG. DEPT. CTPD ENG. DEPT. AUT-PSAC

GRAPHICAL SYMBOLS FOR DIAGRAMS
132kV UGF-8710 RELAY PANEL-1/2
S/S 8709-132/13.8KV IN AL-KHARJ CITY
RIYADH SAUDI ARABIA

الشركة الوطنية لنقل الكهرباء
نقل الكهرباء
National Grid SA

INDEX	PLANT NO.	DRAWING NUMBER	SHEET NO. SHT	SHEET NO. CONT.	REV. NO.
-	C421	CD-322919	012	013	00

NG/D2-0 (2012/01)
DMS VECTOR NGD200

THIS DRAWING AND THE INFORMATION CONTAINED HEREIN ARE THE SOLE PROPERTY OF National Grid SA NO REPRODUCTION IN FULL OR IN PART SHALL BE OBTAINED FROM THIS DOCUMENT WITHOUT THE WRITTEN CONSENT OF ITS OWNER.

LEGENDS

±R1	DC SUPPLY - MAIN PROTECTION
±R2	DC SUPPLY - SECONDARY PROTECTION
±R3	DC SUPPLY - BACK UP PROTECTION
±IT	DC SUPPLY - INTER TRIP
FL	DC SUPPLY - FLASHING CIRCUIT
BB RS±	DC SUPPLY - BUS BAR - PROTECTION RESET
BB CBF±/CBF±	DC SUPPLY - CBF PROTECTION
R	RESET BUS - ALARM SYSTEM
CR	CONTROL ROOM
ECC	ENERGY CONTROL CENTRE
LOCAL	THE LOCATION OF CONTROLLED DEVICE
REMOTE	ANY OTHER LOCATION NOT LOCAL
ON	CB NORMALLY OPEN AUXILIARY CONTACT
OFF	CB NORMALLY CLOSED AUXILIARY CONTACT
A	COMMON
T	TEST POSITION
S	SERVICE POSITION
CS	CLOSE IN SERVICE POSITION
CT	CLOSE IN TEST POSITION
LS	LOCAL SERVICE
LT	LOCAL TEST
LC	LOCAL CLOSE
LO	LOCAL OPEN
RO	REMOTE OPEN
OP	OPERATE
RE	RESET

NOTES

LABELS

WHITE LABEL WITH BLACK LETTERING WILL BE PROVIDED FOR ALL MOUNTED APPARATUS EQUIPMENT IDENTIFICATION AND FUNCTION REFERENCE LABEL WILL BE PROVIDED FOR FRONT MOUNTED EQUIPMENTS OF THE PANEL AND EQUIPMENT IDENTIFICATION LABEL WILL BE PROVIDED FOR INTERNALLY MOUNTED EQUIPMENTS

WIRING

PVC INSULATED 600V GRADE
2.5 SQ.mm. YELLOW COLOURED FOR CT CIRCUITS
2.5 SQ.mm. RE COLOURED FOR VT CIRCUITS
1.5 SQ.mm. GREY COLOURED FOR DC SUPPLY, SCADA AND CONTROL CIRCUITS
2.5 SQ.mm. BLACK COLOURED FOR AVC AND AC CIRCUITS
2.5 SQ.mm. YELLOW/GREEN COLOURED FOR EARTHING CONNECTIONS
FOLLOWING MARKERS SHALL BE PROVIDED ON FOLLOWING WIRES:
+ SIGN FOR DC + WIRE
- SIGN FOR DC - WIRE

LUGS

A. CT CIRCUITS- RING TYPE
B. OTHER CIRCUITS - SPADE TYPE

FERULLING

YELLO TUBE 3.2 mm FOR 1.5SQ mm WIRES AND 4.2 FOR 2.5 SQ mm WIRES
(AS PER 31 - TMSS-1, REV.0)

AS-BUILT BY _____ DATE _____ | CONTRACT NO. 11131113/00 | JOB ORDER NO. S-13656

REV. NO.	DATE	DESCRIPTION
00	13 04	FOR APPROVAL

DRAWN BY RIZ CHECKED BY KVR
DATE STARTED 24.01.2013 DATE COMPLETED _____
ORIG. DEPT. CTPD ENG. DEPT. AUT-PSAC

COMMON LEGEND
132kV UGF-8710 RELAY PANEL-1/2
S/S 8709-132/13.8KV IN AL-KHARJ CITY
RIYADH SAUDI ARABIA

الشركة الوطنية لنقل الكهرباء
نقل الكهرباء
National Grid SA

INDEX	PLANT NO.	DRAWING NUMBER	SHEET NO. SHT	SHEET NO. CONT.	REV. NO.
-	C421	CD-322919	013	014	00

NG/D2-0 (2012/01)
DMS VECTOR NGD200

THIS DRAWING AND THE INFORMATION CONTAINED HEREIN ARE THE SOLE PROPERTY OF National Grid SA NO REPRODUCTION IN FULL OR IN PART SHALL BE OBTAINED FROM THIS DOCUMENT WITHOUT THE WRITTEN CONSENT OF ITS OWNER.

FOR 132kV RELAY & CONTROL, PROTN. PANELS

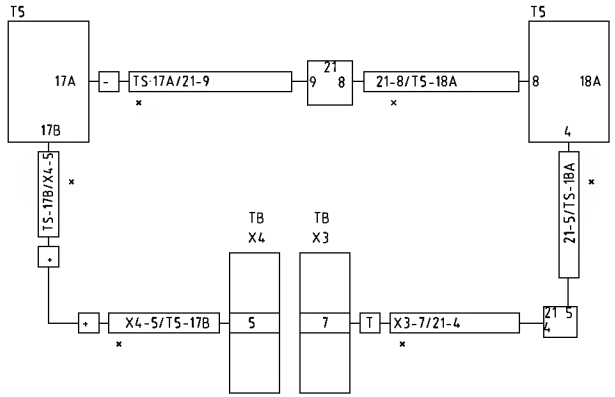

AS PER IEC-391 FIG 14a (W/O SUPPLEMENTARY/IDENTIFICATION MARK)

FOR 132kV PANELS INTERPANEL WIRING

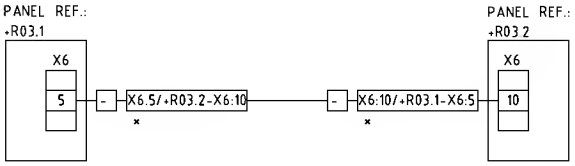

AS PER IEC-391 FIG 14d (W/O SUPPLEMENTARY/IDENTIFICATION MARK)

WIRES - PVC insulated,stranded, cooled onneoled copper conductor graded for 1000V	a. CT Circuits - 2.5 Sqmm PVC Yellow colour
	b. VT Circuits - 2.5 Sqmm PVC Red colour
	c. DC, & CONTROL Circuits - 1.5 Sqmm PVC Grey colour
	d. Alarm Circuits - 2.5 Sqmm PVC Blue colour
	e. AVC & AC Circuits - 2.5 Sqmm PVC Block colour
	f. Earth Circuits - 2.5 Sqmm PVC Yellow/Green colour
LUGS - Pre-Insulated	a(CT Circuits - Ring type
	b(Other Circuits - Spade type

NOTE:1 ADDITIONAL MARKING AS APPLICABLE

NOTE:2 FERRULE NUMBERING WILL BE BLACK LETTERS ON YELLOW TUBE
3.2 mm for 1.5 sq mm wires and
4.2 mm for 2.5 sq mm wires
(As per 31-TMSS-1, REV 0)

NOTE:3 STARTING POINT OF THE FERRULE LEFT TO RIGHT

REV. NO.	DATE	DESCRIPTION
00	13 04	FOR APPROVAL

AS-BUILT BY _____ DATE _____ | CONTRACT NO. 11131113/00 | JOB ORDER NO. S-13656

DRAWN BY RIZ CHECKED BY KVR
DATE STARTED 24.01.2013 DATE COMPLETED _____
ORGG. DEPT. CTPD ENG. DEPT. AUT-PSAC

FERRULE AND WIRING DETAILS
132kV UGF-8710 RELAY PANEL-1/2
S/S 8709-132/13.8KV IN AL-KHARJ CITY
RIYADH SAUDI ARABIA

الشركة الوطنية لنقل الكهرباء
نقل الكهرباء
National Grid SA

INDEX	PLANT NO.	DRAWING NUMBER	SHEET NO. SHT	SHEET NO. CONT.	REV. NO.
-	C421	CD-322919	014	015	00

NG/D2-0 (2012/01)
DMS VECTOR NGD200

THIS DRAWING AND THE INFORMATION CONTAINED HEREIN ARE THE SOLE PROPERTY OF National Grid SA NO REPRODUCTION IN FULL OR IN PART SHALL BE OBTAINED FROM THIS DOCUMENT WITHOUT THE WRITTEN CONSENT OF ITS OWNER.

MANUFACTURER	SCHEMATICS DWG.NO	PANEL DESCRIPITION	PANEL REFERENCE
ABB PROTECTION & SUBSTATION AUTOMATION		SS B709 132kV RELAY PANELS	
	CD-32292B	132/13.BkV GT-1 RELAY PANEL -1	+R05.1
		132/13.BkV GT-1 RELAY PANEL -2	+R05.2
	CD-322931	132/13.BkV GT-2 RELAY PANEL -1	+R03.1
		132/13.BkV GT-2 RELAY PANEL -2	+R03.2
	CD-322934	132/13.BkV GT-3 RELAY PANEL -1	+R04.1
		132/13.BkV GT-3 RELAY PANEL -2	+R04.2
	CD-322936	132/13.BkV TRANSFORMER-1,2& 3 AVC PANEL	+AVC
	CD-322922	132KV SPARE-1 UGF RELAY PANEL -1	+R07.1
		132KV SPARE-1 UGF RELAY PANEL -2	+R07.2
	CD-322916	132KV B020 UGF RELAY PANEL -1	+R02.1
		132KV B020 UGF RELAY PANEL -2	+R02.2
	CD-322919	132KV B710 UGF RELAY PANEL -1	+R03.1
		132KV B710 UGF RELAY PANEL -2	+R03.2
	CD-322925	132KV SPARE-2 UGF RELAY PANEL -1	+R06.1
		132KV SPARE-2 UGF RELAY PANEL -2	+R06.2
	CD-323012	132KV FOIP PANEL	+FOIP
	CD-322946	132kV BUS COUPLER-A	+R130
	CD-32294B	132kV BUS COUPLER-B	+R230
	CD-322950	132kV BUS SECTION	+R120
	CD-322991	132kV BUSBAR PROTECTION MAIN-1 CENTRAL UNIT PANEL	+BB1-1
	CD-322993	132kV BUSBAR PROTECTION MAIN-1 BAY UNIT PANEL	+BB1-2
	CD-322995	132kV BUSBAR PROTECTION MAIN-1 BAY UNIT PANEL	+BB1-3
	CD-322997	132kV BUSBAR PROTECTION MAIN-1 BAY UNIT PANEL	+BB1-4
	CD-322999	132kV BUSBAR PROTECTION MAIN-1 BAY UNIT PANEL	+BB1-5
	CD-323001	132kV BUSBAR PROTECTION MAIN-2 CENTRAL UNIT PANEL	+BB2-1
	CD-323003	132kV BUSBAR PROTECTION MAIN-2 BAY UNIT PANEL	+BB2-2
	CD-323005	132kV BUSBAR PROTECTION MAIN-2 BAY UNIT PANEL	+BB2-3
	CD-323007	132kV BUSBAR PROTECTION MAIN-2 BAY UNIT PANEL	+BB2-4
	CD-323009	132kV BUSBAR PROTECTION MAIN-2 BAY UNIT PANEL	+BB2-5

AS-BUILT BY _____ DATE _____ | CONTRACT NO. 11131113/00 | JOB ORDER NO. S-13656

REV. NO.	DATE	DESCRIPTION
00	13 04	FOR APPROVAL

DRAWN BY RIZ CHECKED BY KVR
DATE STARTED 24.01.2013 DATE COMPLETED _____
DPRG. DEPT. CTPD ENG. DEPT. AUT-PSAC

DRAWING REFERENCES
132kV UGF-8710 RELAY PANEL-1/2
S/S 8709-132/13.8KV IN AL-KHARJ CITY
RIYADH SAUDI ARABIA

الشركة الوطنية لنقل الكهرباء
نقل الكهرباء
National Grid SA

INDEX	PLANT NO.	DRAWING NUMBER	SHEET NO. SHT	SHEET NO. CONT.	REV. NO.
-	C421	CD-322919	015	016	00

NG/D2-D (2012/01)
DMS VECTOR NGD200

THIS DRAWING AND THE INFORMATION CONTAINED HEREIN ARE THE SOLE PROPERTY OF National Grid SA NO REPRODUCTION IN FULL OR IN PART SHALL BE OBTAINED FROM THIS DOCUMENT WITHOUT THE WRITTEN CONSENT OF ITS OWNER.

MANUFACTURER	SCHEMATICS DWG.NO	PANEL DESCRIPITION	PANEL REFERENCE
ABB PROTECTION & SUBSTATION AUTOMATION		SS 8709 13.8KV RELAY PANELS	
	CD-322952	13.8KV Capacitor Bank-1 Protection Panel	+CBP-1
	CD-322954	13.8KV Capacitor Bank-2 Protection Panel	+CBP-2
	CD-322956	13.8KV Capacitor Bank-2 Protection Panel	+CBP-3
	CD-322958	13.8 KV ACCS PANEL	+ACCS
	CD-322962	13.8KV ACSE PANEL	+ACSE
	CD-322968	13.8KV Under Voltage Load Shedding Panel	+UVLS
	CD-322964	13.8KV Under Frequency Load Shedding Panel-1	+UFLS01
	CD-322966	13.8KV Under Frequency Load Shedding Panel-2	+UFLS02

REV. NO.	DATE	DESCRIPTION
00	13 04	FOR APPROVAL

AS-BUILT BY _____ DATE _____

CONTRACT NO. 11131113/00

JOB ORDER NO. S-13656

DRAWN BY RIZ CHECKED BY KVR

DATE STARTED 24.01.2013 DATE COMPLETED _____

OPRG. DEPT. CTPD ENG. DEPT. AUT-PSAC

DRAWING REFERENCES

132kV UGF-8710 RELAY PANEL-1/2

S/S 8709-132/13.8KV IN AL-KHARJ CITY

RIYADH SAUDI ARABIA

الشركة الوطنية لنقل الكهرباء

نقل الكهرباء
National Grid SA

INDEX	PLANT NO.	DRAWING NUMBER	SHEET NO. SHT	SHEET NO. CONT.	REV. NO.
-	C421	CD-322919	016	051	00

NG/D2-0 (2012/01)

DMS VECTOR NGD200

THIS DRAWING AND THE INFORMATION CONTAINED HEREIN ARE THE SOLE PROPERTY OF National Grid SA NO REPRODUCTION IN FULL OR IN PART SHALL BE OBTAINED FROM THIS DOCUMENT WITHOUT THE WRITTEN CONSENT OF ITS OWNER.

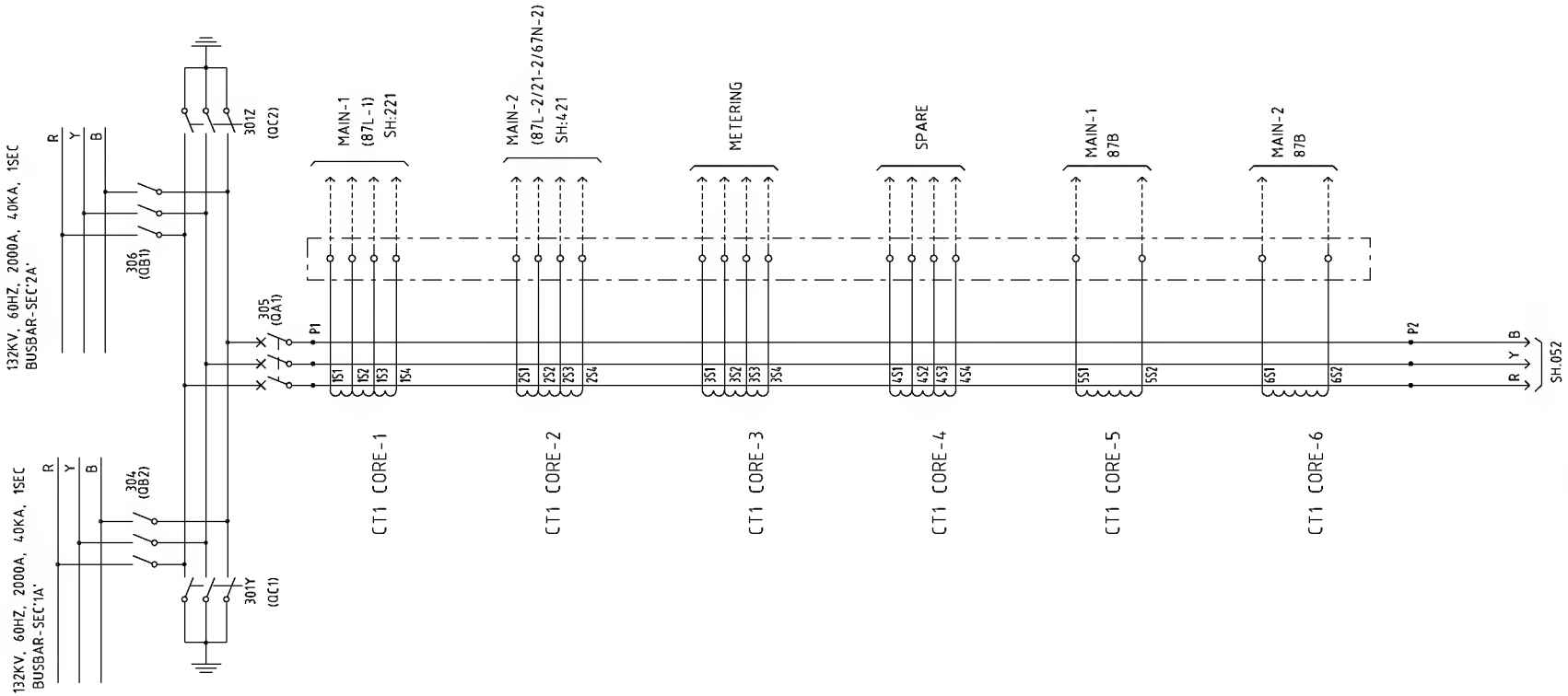

CT	RATIO	CLASS	VK IN VOLTS	IMAG @ VK IN mA	RCT IN (OHMS)	BURDEN IN VA	FUNCTION
CT1-1	1600-1200-800/1A	X	>1400	≤100	≤2	-	MAIN-1(IED-1)
CT1-2	1600-1200-800/1A	X	>1400	≤100	≤2	-	MAIN-2(IED-2)
CT1-3	1600-1200-800/1A	X	>1400	≤100	≤2	-	METERING
CT1-4	1600-1200-800/1A	X	>500	≤100	≤5	-	SPARE
CT1-5	2000/1A	X	>1400	≤25	≤2	-	87B MAIN-1
CT1-6	2000/1A	X	>1400	≤25	≤2	-	87B MAIN-2

AS-BUILT BY _____ DATE _____ | CONTRACT NO. 11131113/00 | JOB ORDER NO. S-13656

REV. NO.	DATE	DESCRIPTION
00	13 04	FOR APPROVAL

DRAWN BY RIZ CHECKED BY KVR
DATE STARTED 24.01.2013 DATE COMPLETED _____
DPRG. DEPT. CTPD ENG. DEPT. AUT-PSAC

PRIMARY SYSTEM (UG-8710)
132kV UGF-8710 RELAY PANEL-1/2
S/S 8709-132/13.8KV IN AL-KHARJ CITY
RIYADH SAUDI ARABIA

الشركة الوطنية لنقل الكهرباء
نقل الكهرباء
National Grid SA

INDEX	PLANT NO.	DRAWING NUMBER	SHEET NO. SHT	SHEET NO. CONT.	REV. NO.
-	C421	CD-322919	051	052	00

NG/D2-0 (2012/01)
DMS VECTOR NGD200

THIS DRAWING AND THE INFORMATION CONTAINED HEREIN ARE THE SOLE PROPERTY OF National Grid SA NO REPRODUCTION IN FULL OR IN PART SHALL BE OBTAINED FROM THIS DOCUMENT WITHOUT THE WRITTEN CONSENT OF ITS OWNER.

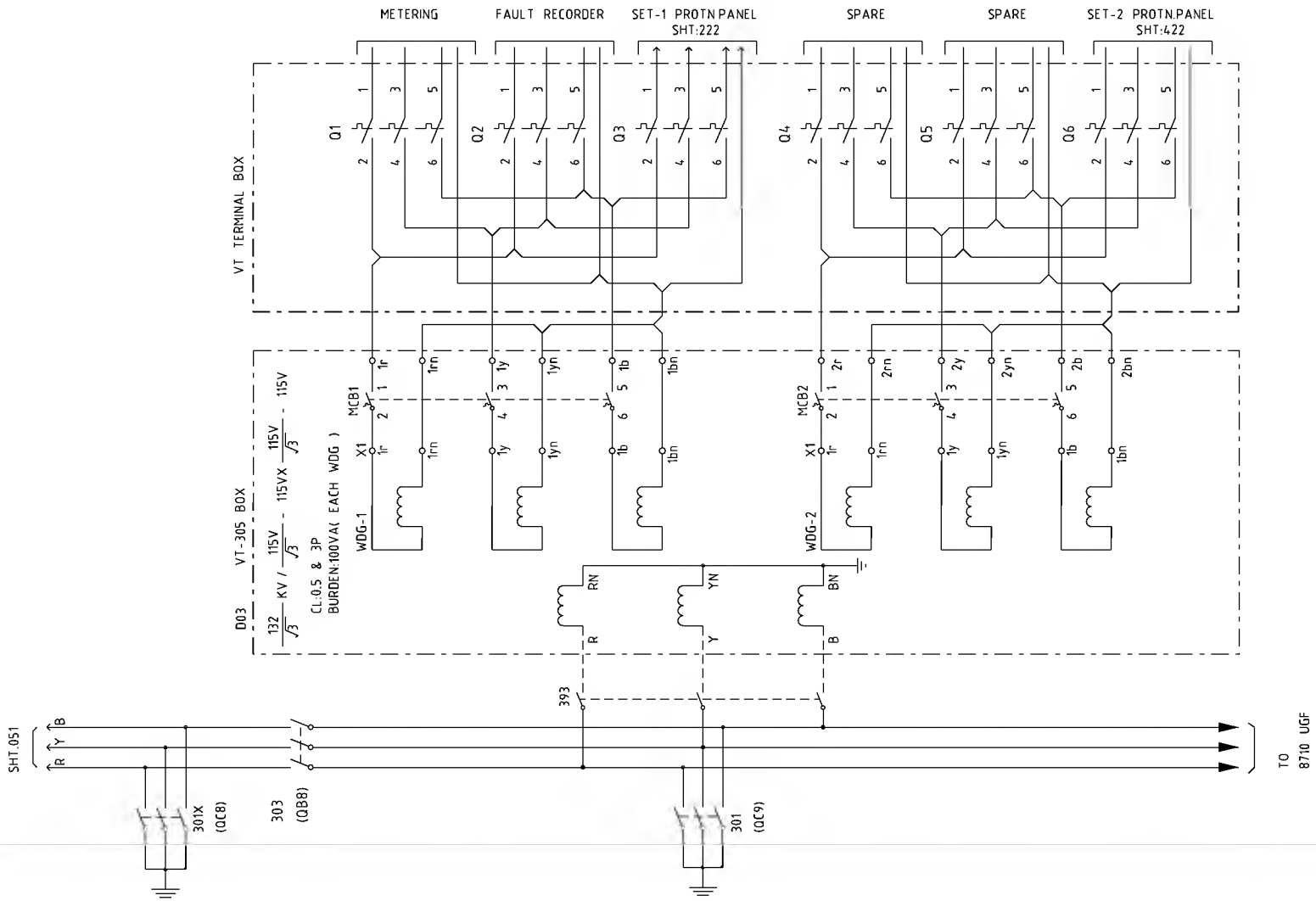

AS-BUILT BY _____ DATE _____	CONTRACT NO. 11131113/00	JOB ORDER NO. S-13656

REV. NO.	DATE	DESCRIPTION
00	13 04	FOR APPROVAL

DRAWN BY RIZ CHECKED BY KVR
DATE STARTED 24.01.2013 DATE COMPLETED _____
ORGN. DEPT. CTPD ENG. DEPT. AUT-PSAC

PRIMARY SYSTEM (UG-8710)
132kV UGF-8710 RELAY PANEL-1/2
S/S 8709-132/13.8KV IN AL-KHARJ CITY
RIYADH SAUDI ARABIA

الشركة الوطنية لنقل الكهرباء
نقل الكهرباء
National Grid SA

INDEX	PLANT NO.	DRAWING NUMBER	SHEET NO. SHT	SHEET NO. CONT.	REV. NO.
-	C421	CD-322919	052	211	00

NG/D2-0 (2012/01)
DMS VECTOR NGD200

THIS DRAWING AND THE INFORMATION CONTAINED HEREIN ARE THE SOLE PROPERTY OF National Grid SA NO REPRODUCTION IN FULL OR IN PART SHALL BE OBTAINED FROM THIS DOCUMENT WITHOUT THE WRITTEN CONSENT OF ITS OWNER.

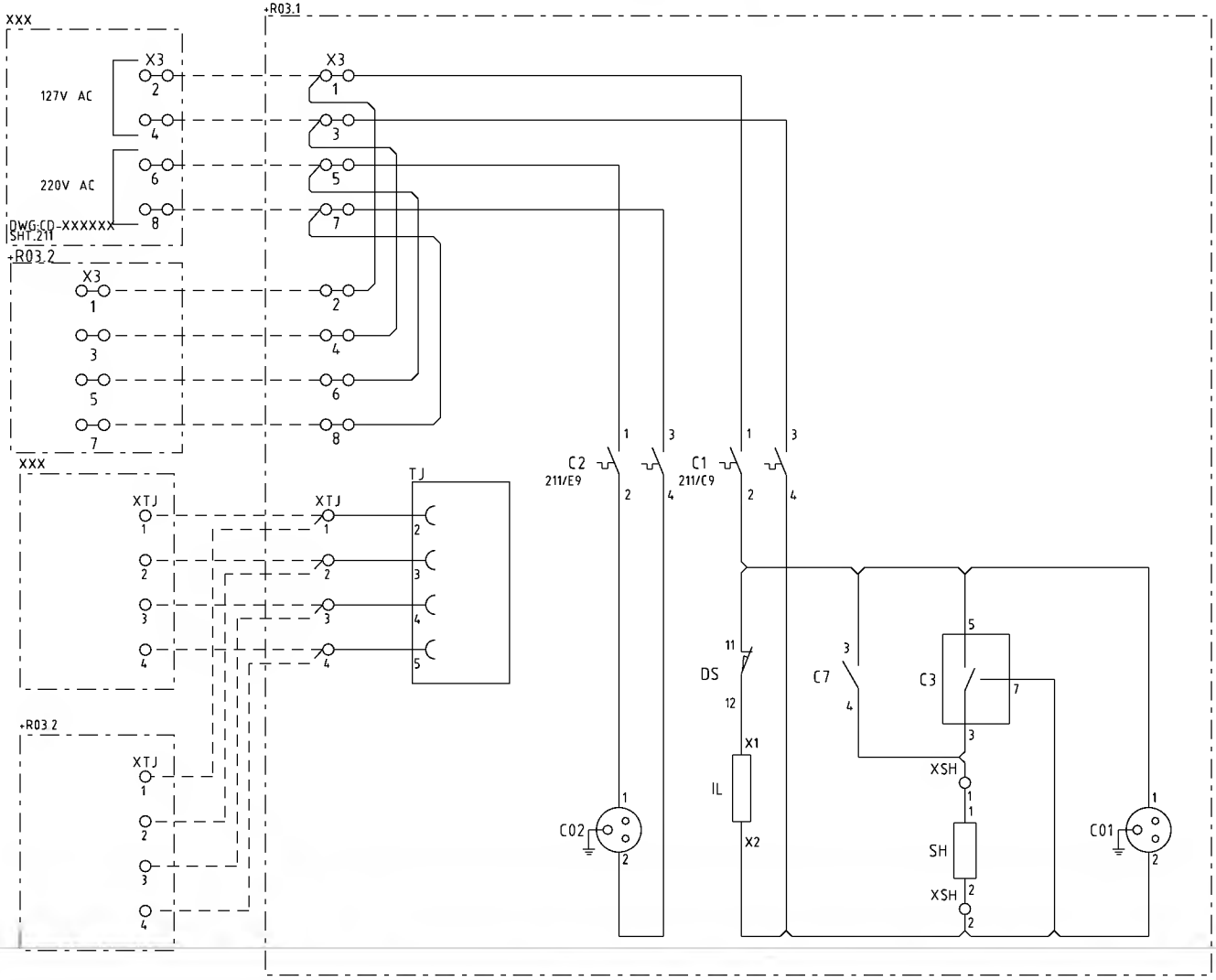

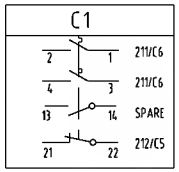

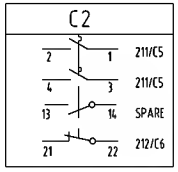

AS-BUILT BY _____ DATE _____	CONTRACT NO. 11131113/00	JOB ORDER NO. S-13656	AC SUPPLY FOR ILLUMINATION &POWER SOCKET	الشركة الوطنية لنقل الكهرباء — نقل الكهرباء National Grid SA
	DRAWN BY RIZ	CHECKED BY KVR	132kV UGF-8710 RELAY PANEL-1/2	
00 / 13 04 / FOR APPROVAL	DATE STARTED 24.01.2013	DATE COMPLETED	S/S 8709-132/13.8KV IN AL-KHARJ CITY	INDEX - / PLANT NO. C421 / DRAWING NUMBER CD-322919 / SHEET NO. SHT 211 CONT. 212 / REV. NO. 00
REV. NO. / DATE / DESCRIPTION	ORG. DEPT. CTPD	ENG. DEPT. AUT-PSAC	RIYADH SAUDI ARABIA	

NG/D2-0 (2012/01)

DMS | VECTOR | NGD200

THIS DRAWING AND THE INFORMATION CONTAINED HEREIN ARE THE SOLE PROPERTY OF National Grid SA NO REPRODUCTION IN FULL OR IN PART SHALL BE OBTAINED FROM THIS DOCUMENT WITHOUT THE WRITTEN CONSENT OF ITS OWNER.

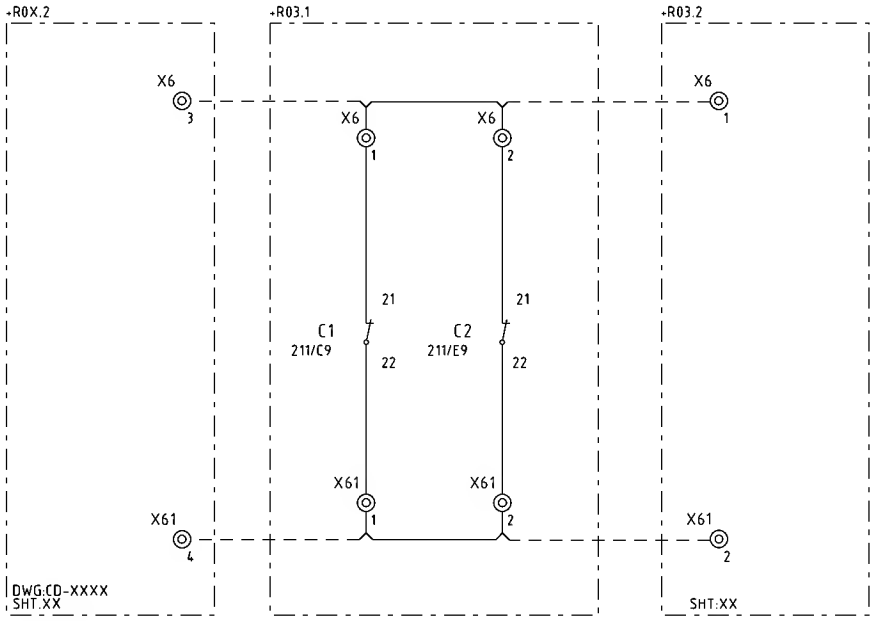

AS-BUILT BY _____ DATE _____	CONTRACT NO. 11131113/00	JOB ORDER NO. S-13656	AC MCB AUX CONTACTS	
			132kV UGF-8710 RELAY PANEL-1/2	
00 / 13 04 / FOR APPROVAL	DRAWN BY RIZ	CHECKED BY KVR	S/S 8709-132/13.8KV IN AL-KHARJ CITY	
REV. NO. / DATE / DESCRIPTION	DATE STARTED 24.01.2013	DATE COMPLETED _____	RIYADH	SAUDI ARABIA
	OPRG. DEPT. CTPD	ENG. DEPT. AUT-PSAC		

الشركة الوطنية لنقل الكهرباء
نقل الكهرباء
National Grid SA

INDEX	PLANT NO.	DRAWING NUMBER	SHEET NO. SHT	SHEET NO. CONT.	REV. NO.
-	C421	CD-322919	212	216	00

NG/D2-0 (2012/01)

DMS | VECTOR | NGD200

THIS DRAWING AND THE INFORMATION CONTAINED HEREIN ARE THE SOLE PROPERTY OF National Grid SA NO REPRODUCTION IN FULL OR IN PART SHALL BE OBTAINED FROM THIS DOCUMENT WITHOUT THE WRITTEN CONSENT OF ITS OWNER.

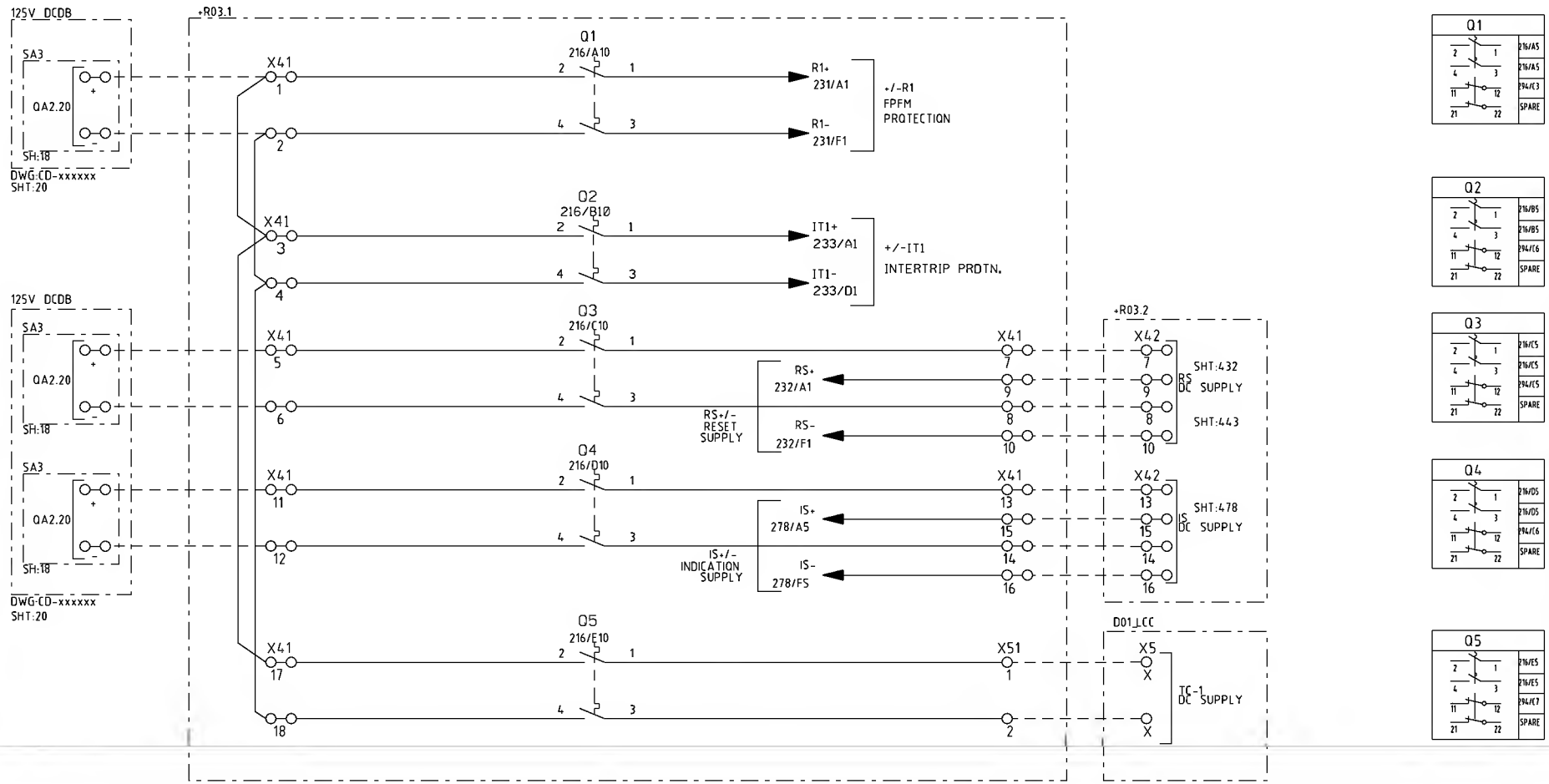

AS-BUILT BY _____ DATE _____	CONTRACT NO. 11131113/00	JOB ORDER NO. S-13656
DRAWN BY RIZ	CHECKED BY KVR	
DATE STARTED 24.01.2013	DATE COMPLETED	
ORG. DEPT. CTPD	ENG. DEPT. AUT-PSAC	

REV. NO.	DATE	DESCRIPTION
00	13 04	FOR APPROVAL

DC SUPPLY DISTRIBUTION
132kV UGF-8710 RELAY PANEL-1/2
S/S 8709-132/13.8KV IN AL-KHARJ CITY
RIYADH SAUDI ARABIA

الشركة الوطنية لنقل الكهرباء
نقل الكهرباء
National Grid SA

INDEX	PLANT NO.	DRAWING NUMBER	SHEET NO. SHT	SHEET NO. CONT.	REV. NO.
-	C421	CD-322919	216	221	00

NG/D2-0 (2012/01)
DMS VECTOR NGD200

THIS DRAWING AND THE INFORMATION CONTAINED HEREIN ARE THE SOLE PROPERTY OF National Grid SA NO REPRODUCTION IN FULL OR IN PART SHALL BE OBTAINED FROM THIS DOCUMENT WITHOUT THE WRITTEN CONSENT OF ITS OWNER.

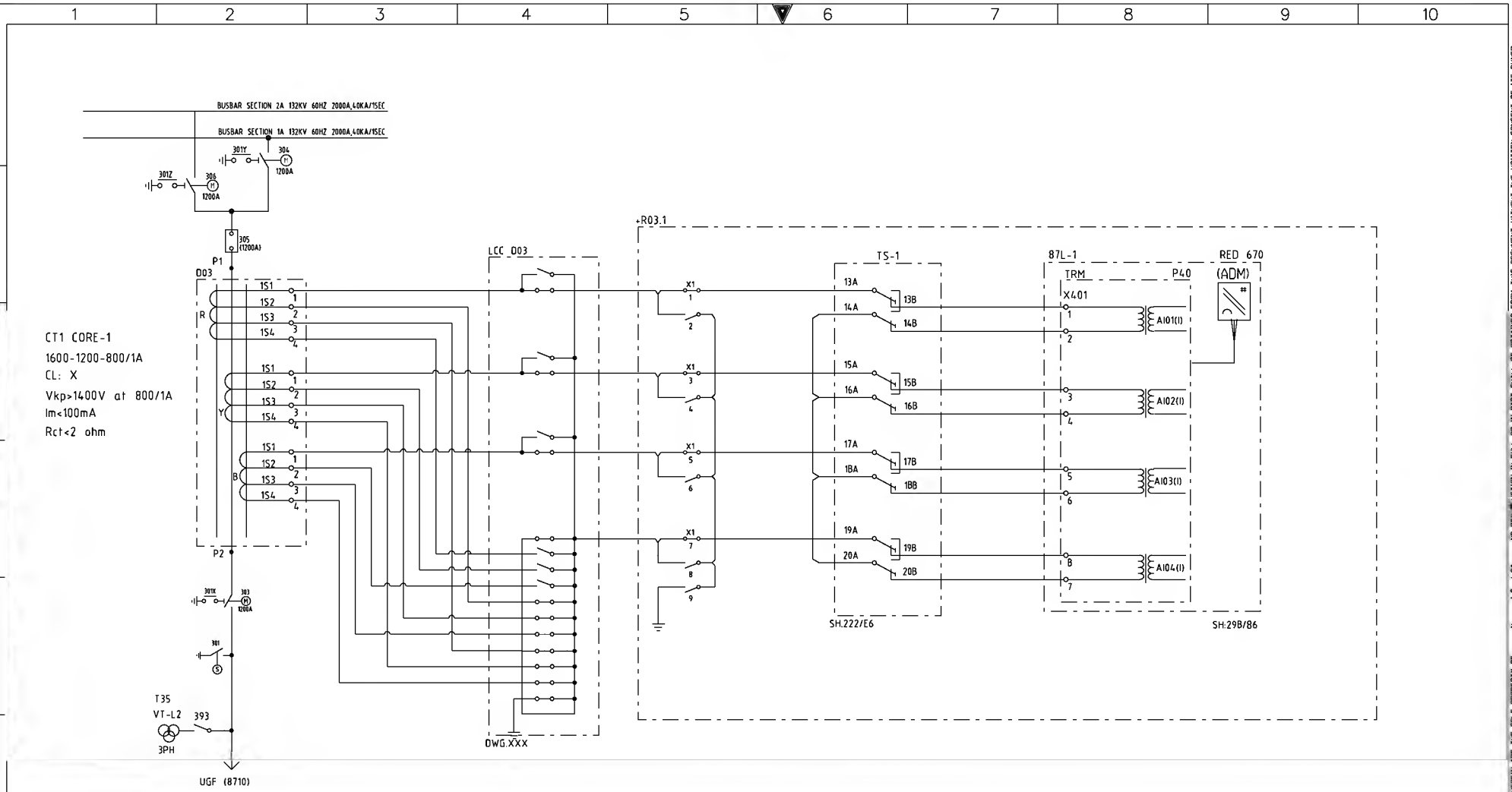

+R03.1

AS-BUILT BY _____ DATE _____	CONTRACT NO. 11131113/00	JOB ORDER NO. S-13656	CURRENT TRANSFORMER INPUTS -87L-1	الشركة الوطنية لنقل الكهرباء — نقل الكهرباء National Grid SA
	DRAWN BY RIZ	CHECKED BY KVR	132kV UGF-8710 RELAY PANEL-1 +R03.1	
00 / 13 04 / FOR APPROVAL	DATE STARTED 24.01.2013	DATE COMPLETED	S/S 8709-132/13.8KV IN AL-KHARJ CITY	INDEX - / PLANT NO. C421 / DRAWING NUMBER CD-322919 / SHEET NO. SHT 221 CONT. 222 / REV. NO. 00
REV. NO. / DATE / DESCRIPTION	OPRG. DEPT. CTPD	ENG. DEPT. AUT-PSAC	RIYADH SAUDI ARABIA	NG/D2-0 (2012/01)
				DMS / VECTOR / NGD200

THIS DRAWING AND THE INFORMATION CONTAINED HEREIN ARE THE SOLE PROPERTY OF National Grid SA NO REPRODUCTION IN FULL OR IN PART SHALL BE OBTAINED FROM THIS DOCUMENT WITHOUT THE WRITTEN CONSENT OF ITS OWNER.

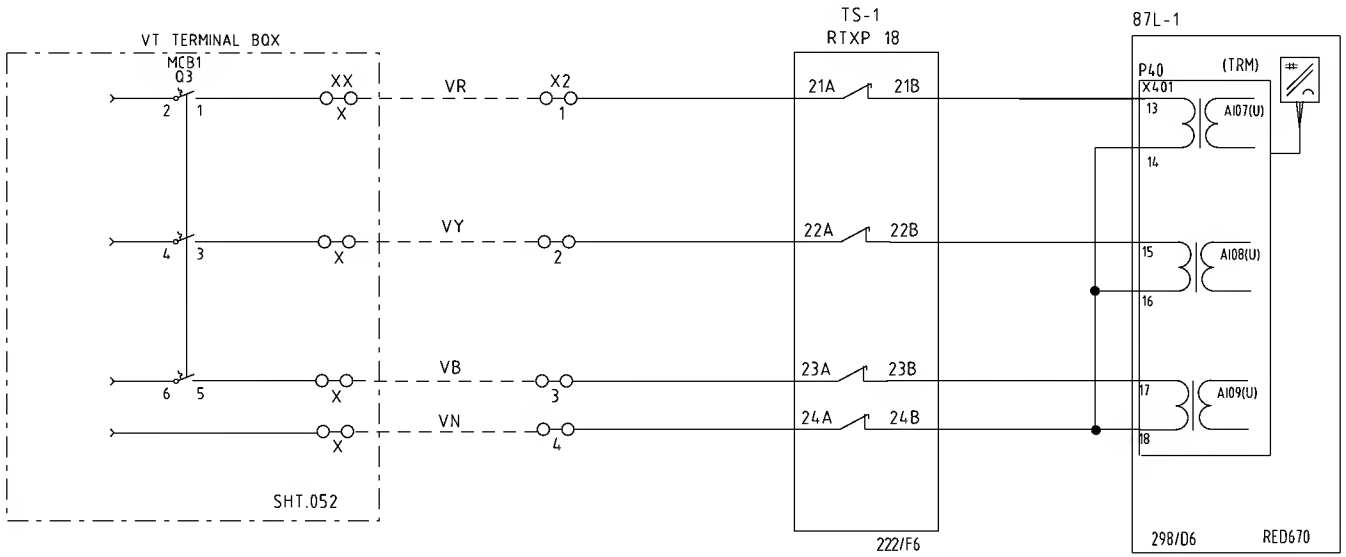

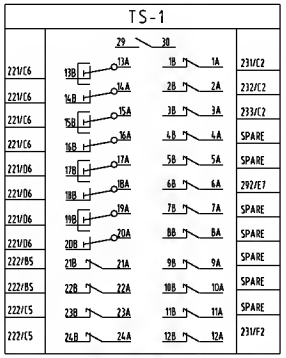

AS-BUILT BY _____ DATE _____	CONTRACT NO. 11131113/00	JOB ORDER NO. S-13656
	DRAWN BY RIZ	CHECKED BY KVR
00 / 13 04 / FOR APPROVAL	DATE STARTED 24.01.2013	DATE COMPLETED _____
REV. NO. / DATE / DESCRIPTION	OPRG. DEPT. CTPD	ENG. DEPT. AUT-PSAC

VOLTAGE TRANSFORMER INPUTS -87L-1
132kV UGF-8710 RELAY PANEL-1 +R03.1
S/S 8709-132/13.8KV IN AL-KHARJ CITY
RIYADH SAUDI ARABIA

الشركة الوطنية لنقل الكهرباء
نقل الكهرباء
National Grid SA

INDEX	PLANT NO.	DRAWING NUMBER	SHEET NO. SHT	SHEET NO. CONT.	REV. NO.
-	C421	CD-322919	222	223	00

NG/D2-D (2012/01)
DMS VECTOR NGD200

THIS DRAWING AND THE INFORMATION CONTAINED HEREIN ARE THE SOLE PROPERTY OF National Grid SA NO REPRODUCTION IN FULL OR IN PART SHALL BE OBTAINED FROM THIS DOCUMENT WITHOUT THE WRITTEN CONSENT OF ITS OWNER.

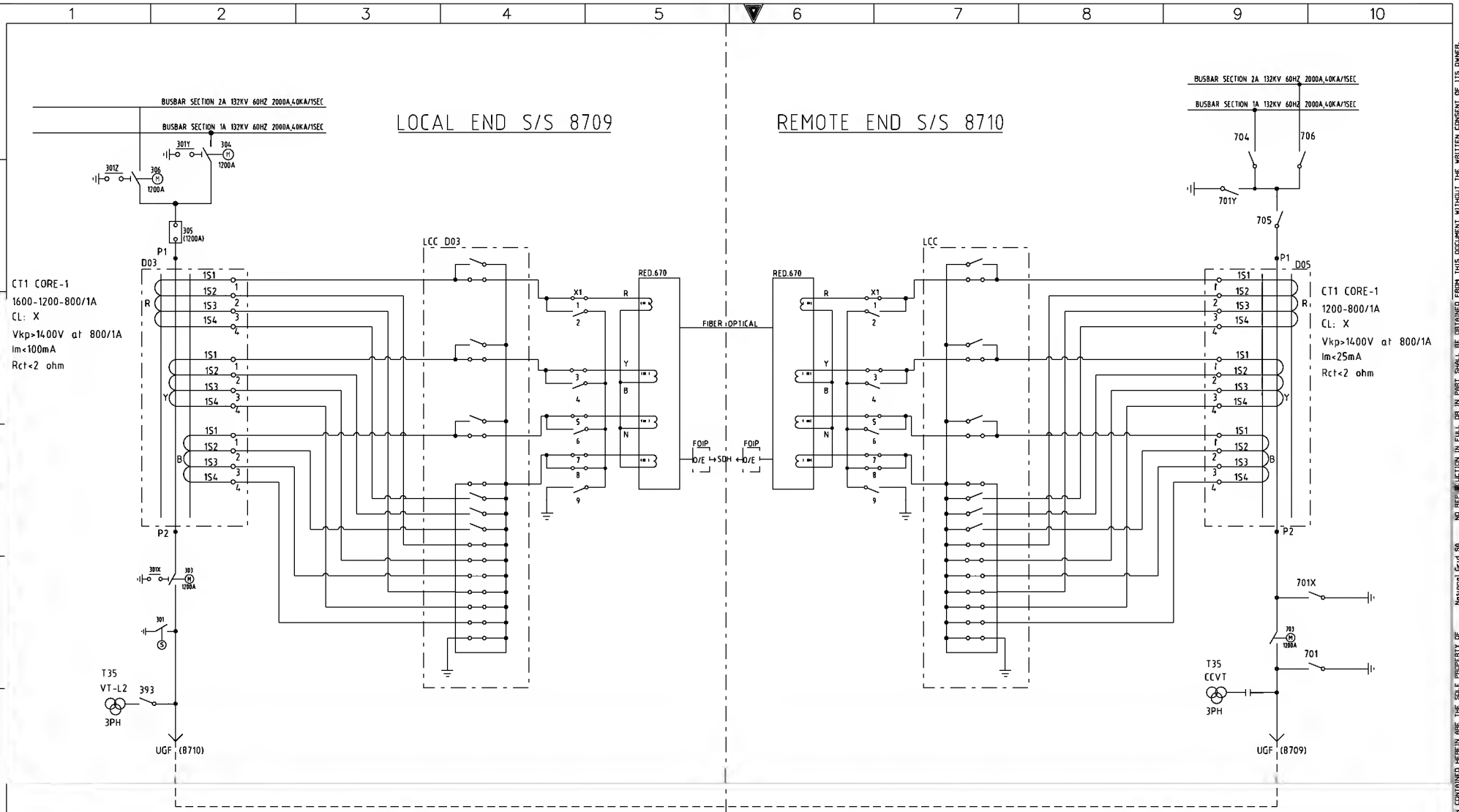

AS-BUILT BY _____ DATE _____	CONTRACT NO. 11131113/00	JOB ORDER NO. S-13656
00 / 13 04 / FOR APPROVAL (REV. NO. / DATE / DESCRIPTION)	DRAWN BY RIZ CHECKED BY KVR DATE STARTED 24.01.2013 DATE COMPLETED _____ OPRG. DEPT. CTPD ENG. DEPT. AUT-PSAC	COMMUNICATION CIRCUITS 132kV UGF-8710 RELAY PANEL-1 +R03.1 S/S 8709-132/13.8KV IN AL-KHARJ CITY RIYADH SAUDI ARABIA

الشركة الوطنية لنقل الكهرباء
نقل الكهرباء
National Grid SA

INDEX	PLANT NO.	DRAWING NUMBER	SHEET NO. SHT	SHEET NO. CONT.	REV. NO.
-	C421	CD-322919	223	231	00

NG/D2-0 (2012/01)
DMS VECTOR NGD200

THIS DRAWING AND THE INFORMATION CONTAINED HEREIN ARE THE SOLE PROPERTY OF National Grid SA NO REPRODUCTION IN FULL OR IN PART SHALL BE OBTAINED FROM THIS DOCUMENT WITHOUT THE WRITTEN CONSENT OF ITS OWNER.

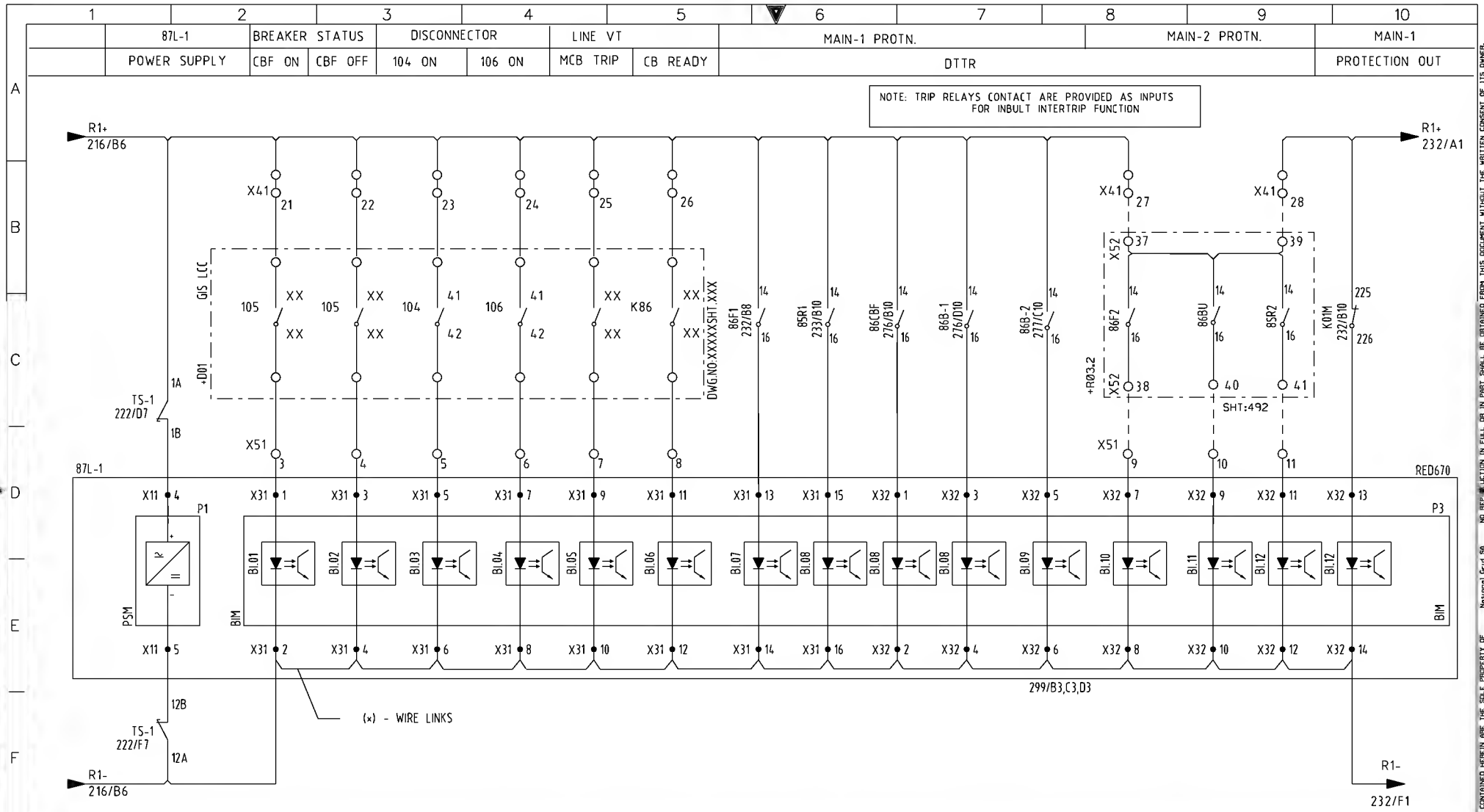

AS-BUILT BY _____ DATE _____	CONTRACT NO. 11131113/00	JOB ORDER NO. S-13656	MAIN-1 PROTN. 87L-1 RELAY-BINARY INPUTS
	DRAWN BY RIZ	CHECKED BY KVR	132kV UGF-8710 RELAY PANEL-1 +R03.1
00 / 13 04 / FOR APPROVAL	DATE STARTED 24.01.2013	DATE COMPLETED	S/S 8709-132/13.8KV IN AL-KHARJ CITY
REV. NO. / DATE / DESCRIPTION	ORGN. DEPT. CTPD	ENG. DEPT. AUT-PSAC	RIYADH SAUDI ARABIA

الشركة الوطنية لنقل الكهرباء
نقل الكهرباء
National Grid SA

INDEX	PLANT NO.	DRAWING NUMBER	SHEET NO. SHT	SHEET NO. CONT.	REV. NO.
-	C421	CD-322919	231	232	00

NG/D2-0 (2012/01)

DMS | VECTOR | NGD200

THIS DRAWING AND THE INFORMATION CONTAINED HEREIN ARE THE SOLE PROPERTY OF National Grid SA NO REPRODUCTION IN FULL OR IN PART SHALL BE OBTAINED FROM THIS DOCUMENT WITHOUT THE WRITTEN CONSENT OF ITS OWNER.

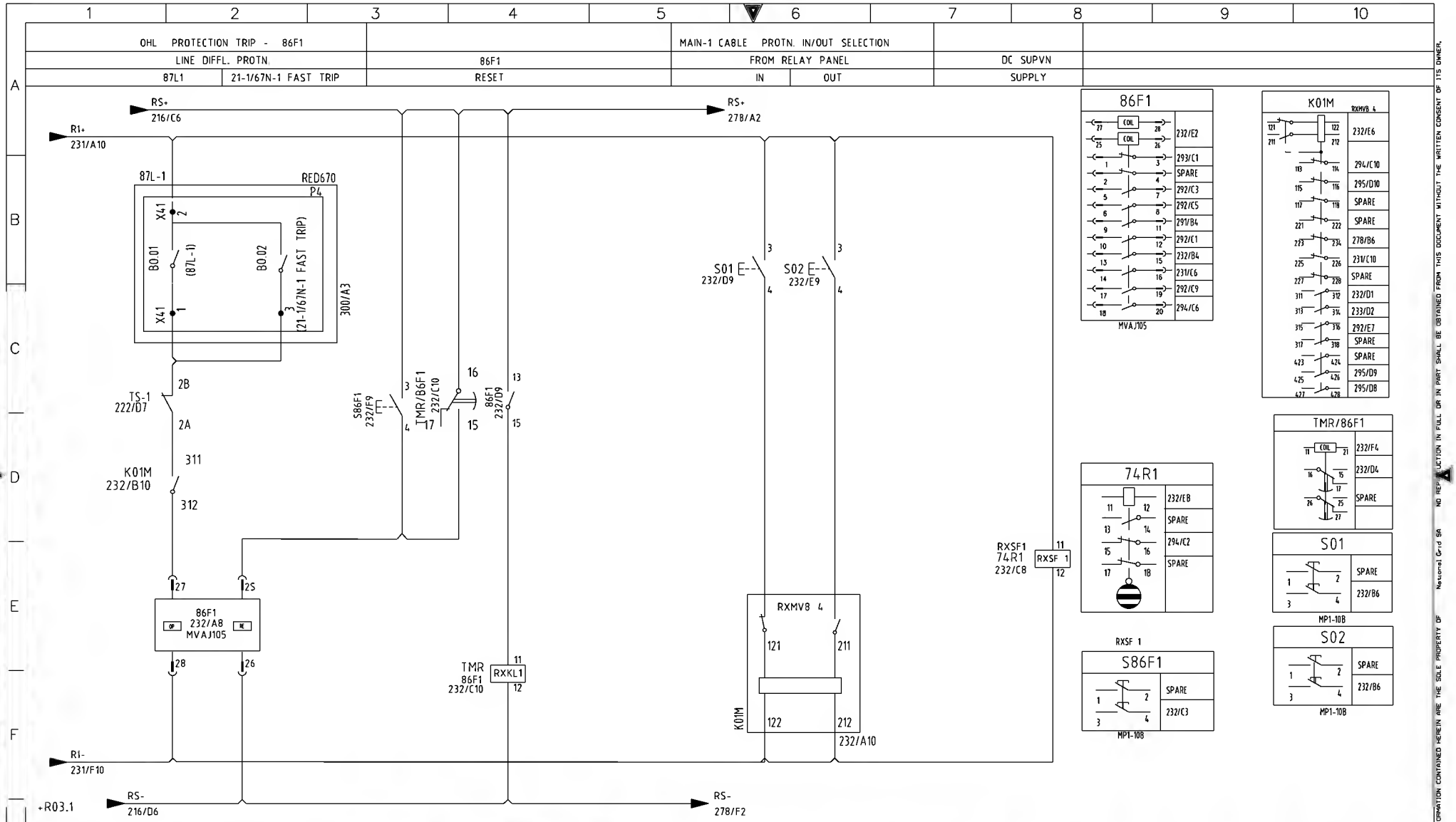

AS-BUILT BY _____ DATE _____	CONTRACT ND. 11131113/00	JOB ORDER ND. S-13656	MAIN-1 CABLE DIFF. PROTECTTION TRIP RELAY CKT.
	DRAWN BY RIZ	CHECKED BY KVR	132kV UGF-8710 RELAY PANEL-1 +R03.1
00 / 13 04 / FOR APPROVAL	DATE STARTED 24.01.2013	DATE COMPLETED	S/S 8709-132/13.8KV IN AL-KHARJ CITY
REV. NO. / DATE / DESCRIPTION	ORGG. DEPT. CTPD	ENG. DEPT. AUT-PSAC	RIYADH SAUDI ARABIA

الشركة الوطنية لنقل الكهرباء
نقل الكهرباء
National Grid SA

INDEX	PLANT ND.	DRAWING NUMBER	SHEET ND. SHT	SHEET ND. CONT.	REV. ND.
-	C421	CD-322919	232	233	00

NG/D2-D (2012/01)
DMS VECTOR NGD200

THIS DRAWING AND THE INFORMATION CONTAINED HEREIN ARE THE SOLE PROPERTY OF National Grid SA NO REPRODUCTION IN FULL OR IN PART SHALL BE OBTAINED FROM THIS DOCUMENT WITHOUT THE WRITTEN CONSENT OF ITS OWNER.

FAST RECIEVED

87L-1

IT1 SUPPLY DC SUPRVN.

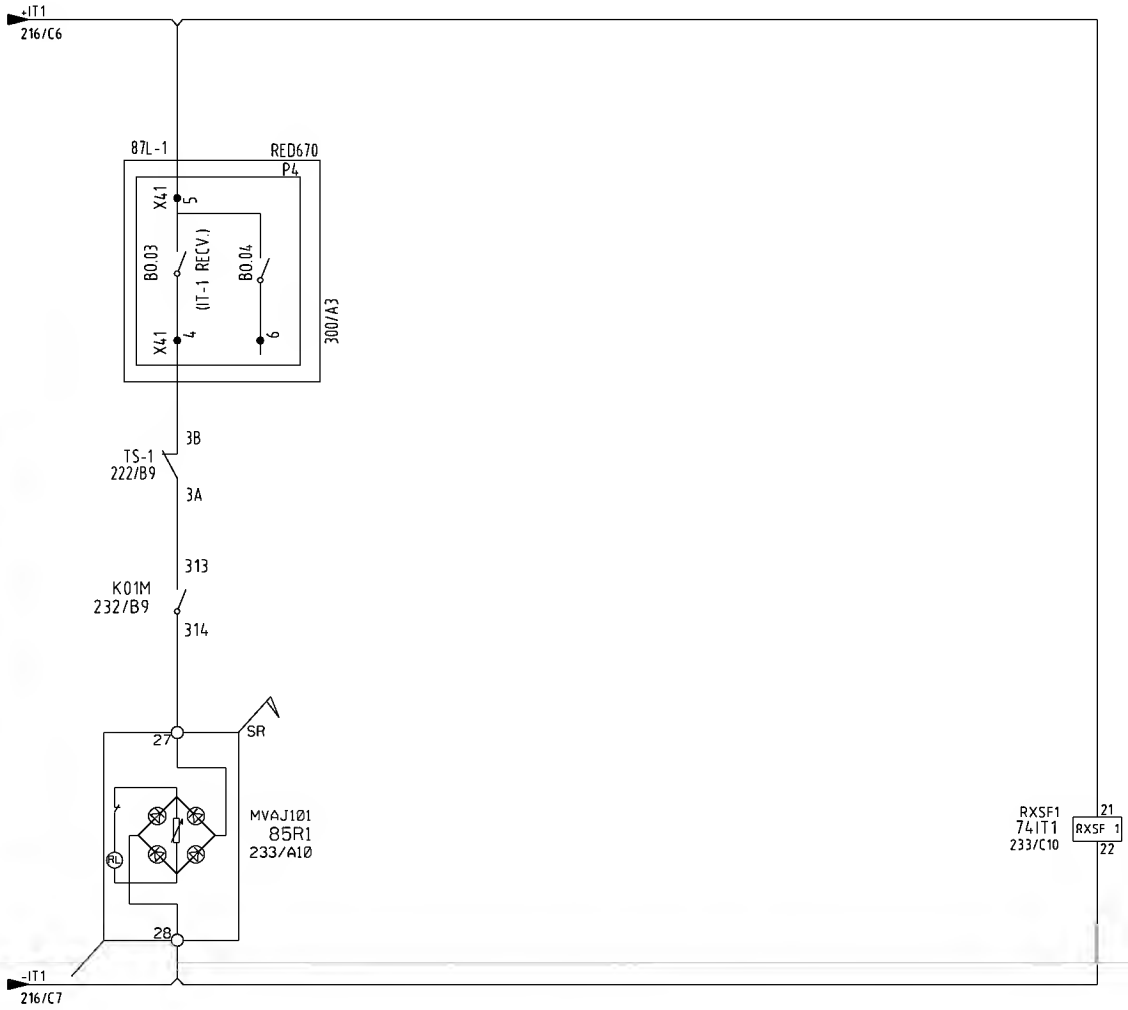

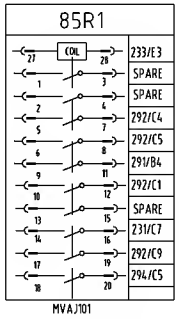

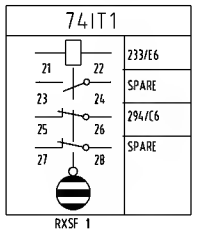

AS-BUILT BY _____ DATE _____	CONTRACT NO. 11131113/00	JOB ORDER NO. S-13656
	DRAWN BY RIZ	CHECKED BY KVR
	DATE STARTED 24.01.2013	DATE COMPLETED _____
	OPRG. DEPT. CTPD	ENG. DEPT. AUT-PSAC

REV. NO.	DATE	DESCRIPTION
00	13 04	FOR APPROVAL

MAIN-1 INTER TRIP CIRCUIT

132kV UGF-8710 RELAY PANEL-1 +R03.1

S/S 8709-132/13.8KV IN AL-KHARJ CITY

RIYADH SAUDI ARABIA

الشركة الوطنية لنقل الكهرباء

نقل الكهرباء National Grid SA

INDEX	PLANT NO.	DRAWING NUMBER	SHEET NO. SHT	SHEET NO. CONT.	REV. NO.
-	C421	CD-322919	233	246	00

NG/D2-0 (2012/01)

DMS VECTOR NGD200

THIS DRAWING AND THE INFORMATION CONTAINED HEREIN ARE THE SOLE PROPERTY OF National Grid SA NO REPRODUCTION IN FULL OR IN PART SHALL BE OBTAINED FROM THIS DOCUMENT WITHOUT THE WRITTEN CONSENT OF ITS OWNER.

CABLE DIFFL. PROTECTION

COMMUNICATION INTERFACE

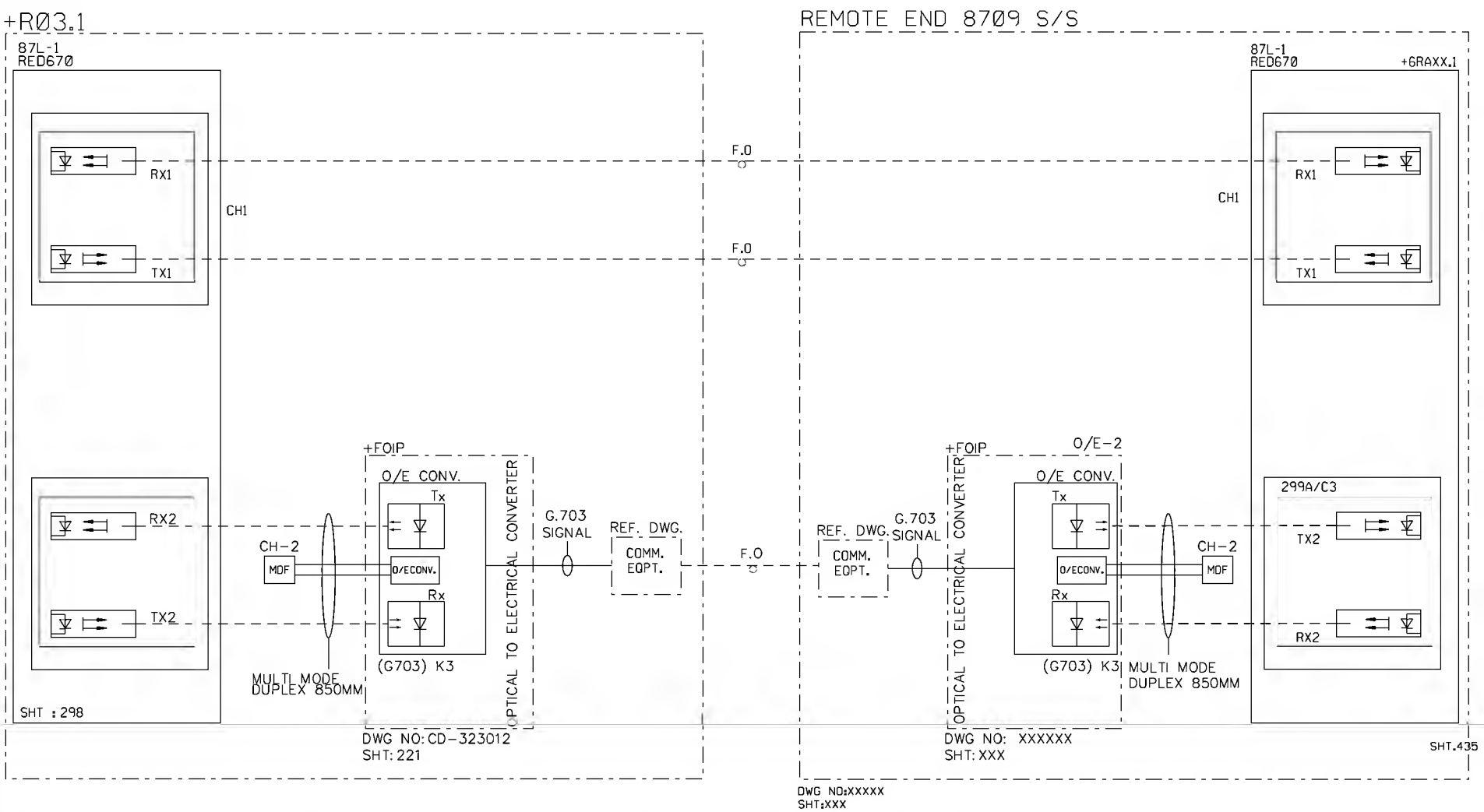

AS-BUILT BY _____ DATE _____	CONTRACT NO. 11131113/00	JOB ORDER NO. S-13656
	DRAWN BY RIZ	CHECKED BY KVR
	DATE STARTED 24.01.2013	DATE COMPLETED _____
	OPRG. DEPT. CTPD	ENG. DEPT. AUT-PSAC

REV. NO.	DATE	DESCRIPTION
00	13 04	FOR APPROVAL

COMMUNICATION INTERFACE

132kV UGF-8710 RELAY PANEL-1 +RØ3.1

S/S 8709-132/13.8KV IN AL-KHARJ CITY

RIYADH SAUDI ARABIA

الشركة الوطنية لنقل الكهرباء

نقل الكهرباء National Grid SA

INDEX	PLANT NO.	DRAWING NUMBER	SHEET NO. SHT	SHEET NO. CONT.	REV. NO.
-	C421	CD-322919	246	276	00

NG/D2-D (2012/01)

DMS VECTOR NGD200

THIS DRAWING AND THE INFORMATION CONTAINED HEREIN ARE THE SOLE PROPERTY OF National Grid SA NO REPRODUCTION IN FULL OR IN PART SHALL BE OBTAINED FROM THIS DOCUMENT WITHOUT THE WRITTEN CONSENT OF ITS OWNER.

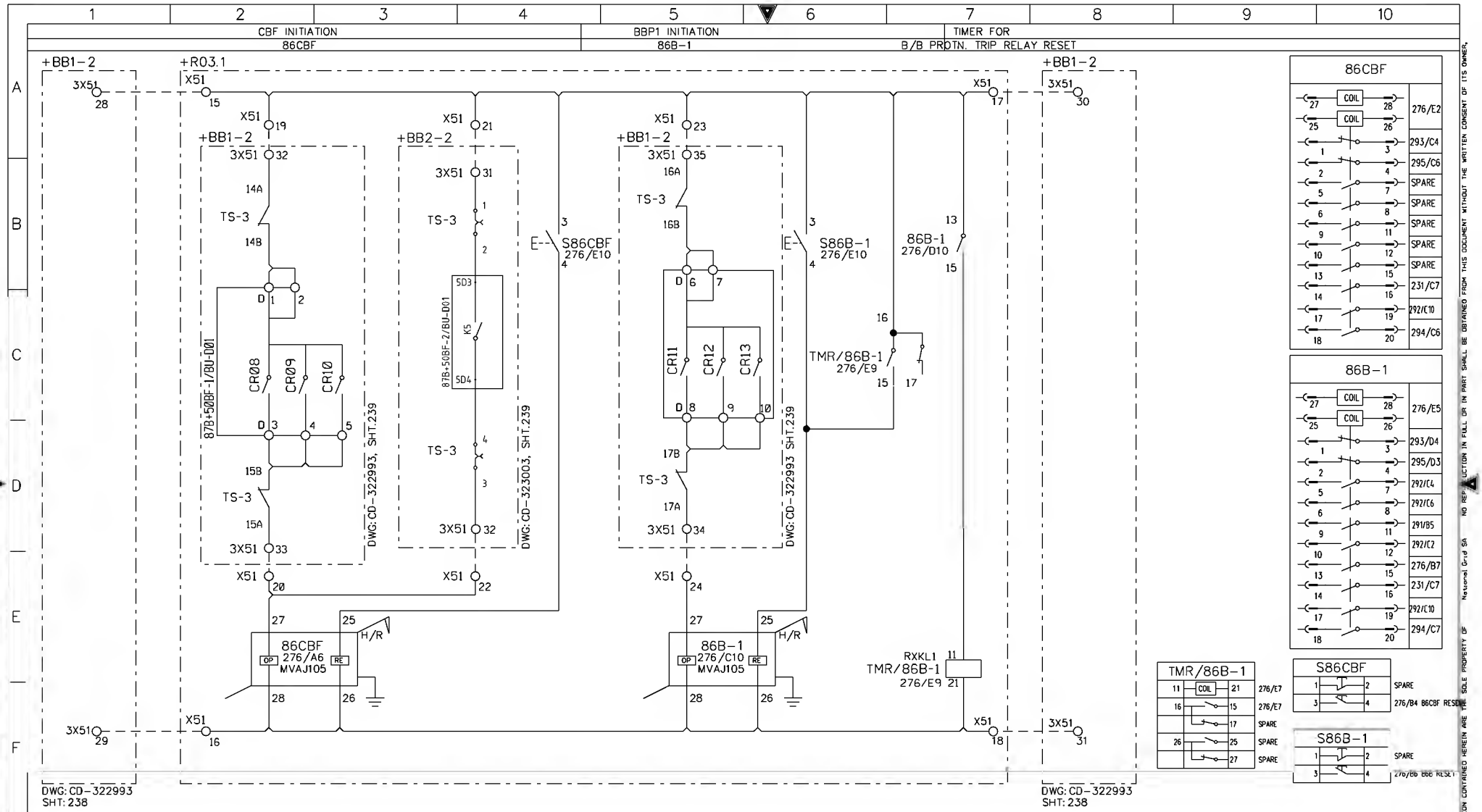

AS-BUILT BY _____ DATE _____	CONTRACT NO. 11131113/00	JOB ORDER NO. S-13656
DRAWN BY RIZ	CHECKED BY KVR	
DATE STARTED 24.01.2013	DATE COMPLETED	
ORG. DEPT. CTPD	ENG. DEPT. AUT-PSAC	

REV. NO.	DATE	DESCRIPTION
00	13 04	FOR APPROVAL

CBF-1/2 & BUSBAR PROTN-1 TRIP RELAY CIRCUIT
132kV UGF-8710 RELAY PANEL-1 +R03.1
S/S 8709-132/13.8KV IN AL-KHARJ CITY
RIYADH SAUDI ARABIA

الشركة الوطنية لنقل الكهرباء
نقل الكهرباء
National Grid SA

INDEX	PLANT NO.	DRAWING NUMBER	SHEET NO. SHT	SHEET NO. CONT.	REV. NO.
-	C421	CD-322919	276	277	00

NG/D2-D (2012/01)
DMS VECTOR NGD200

THIS DRAWING AND THE INFORMATION CONTAINED HEREIN ARE THE SOLE PROPERTY OF National Grid SA NO REPRODUCTION IN FULL OR IN PART SHALL BE OBTAINED FROM THIS DOCUMENT WITHOUT THE WRITTEN CONSENT OF ITS OWNER.

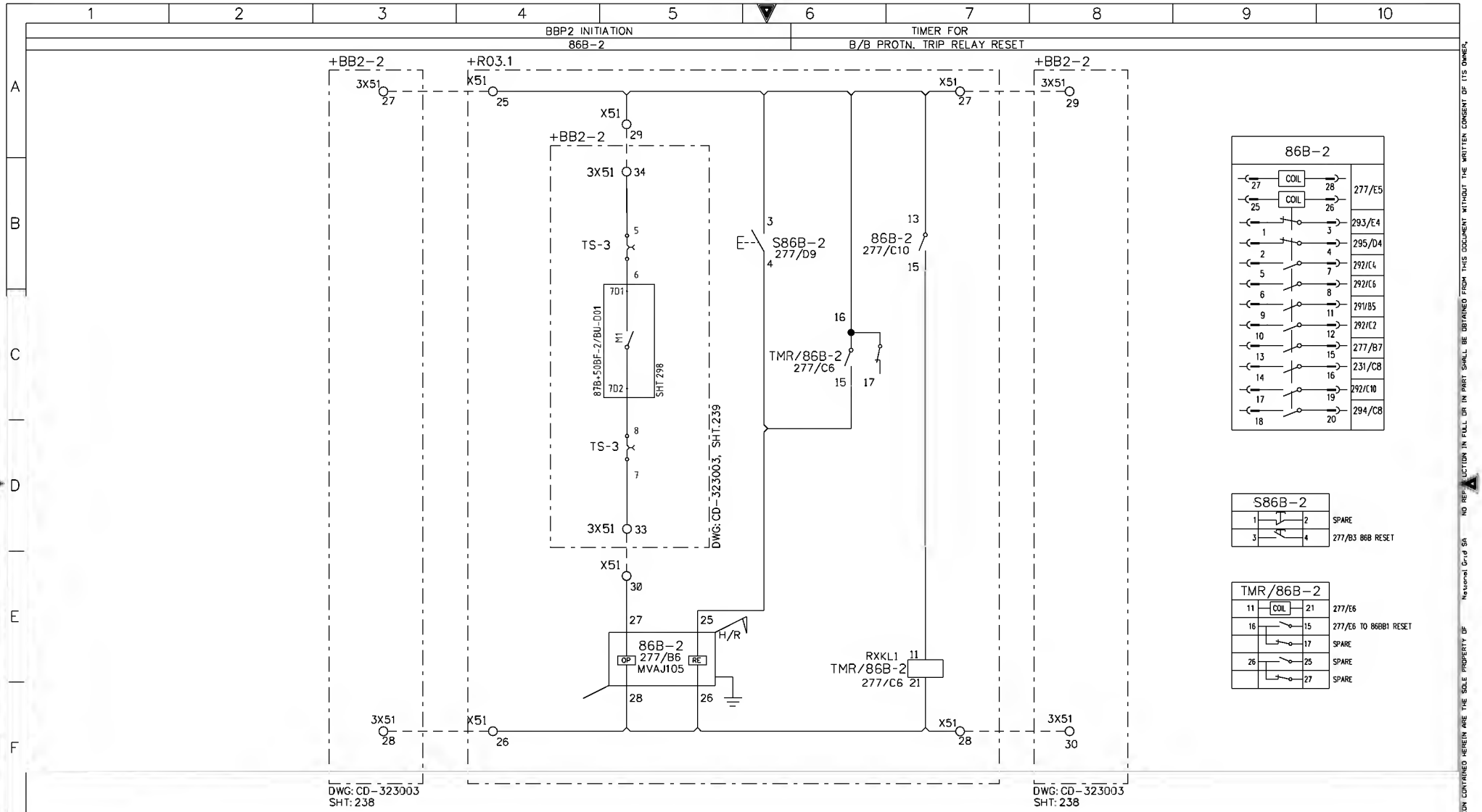

AS-BUILT BY _____ DATE _____	CONTRACT NO. 11131113/00	JOB ORDER NO. S-13656
	DRAWN BY RIZ CHECKED BY KVR	
	DATE STARTED 24.01.2013 DATE COMPLETED _____	
	OPRG. DEPT. CTPD ENG. DEPT. AUT-PSAC	

REV. NO.	DATE	DESCRIPTION
00	13 04	FOR APPROVAL

BUSBAR PROTN-2 TRIP RELAY CIRCUIT
132kV UGF-8710 RELAY PANEL-1 +R03.1
S/S 8709-132/13.8KV IN AL-KHARJ CITY
RIYADH SAUDI ARABIA

الشركة الوطنية لنقل الكهرباء
نقل الكهرباء
National Grid SA

INDEX	PLANT NO.	DRAWING NUMBER	SHEET NO. SHT	SHEET NO. CONT.	REV. NO.
-	C421	CD-322919	277	278	00

NG/D2-D (2012/01)
DMS VECTOR NGD200

THIS DRAWING AND THE INFORMATION CONTAINED HEREIN ARE THE SOLE PROPERTY OF National Grid SA NO REPRODUCTION IN FULL OR IN PART SHALL BE OBTAINED FROM THIS DOCUMENT WITHOUT THE WRITTEN CONSENT OF ITS OWNER.

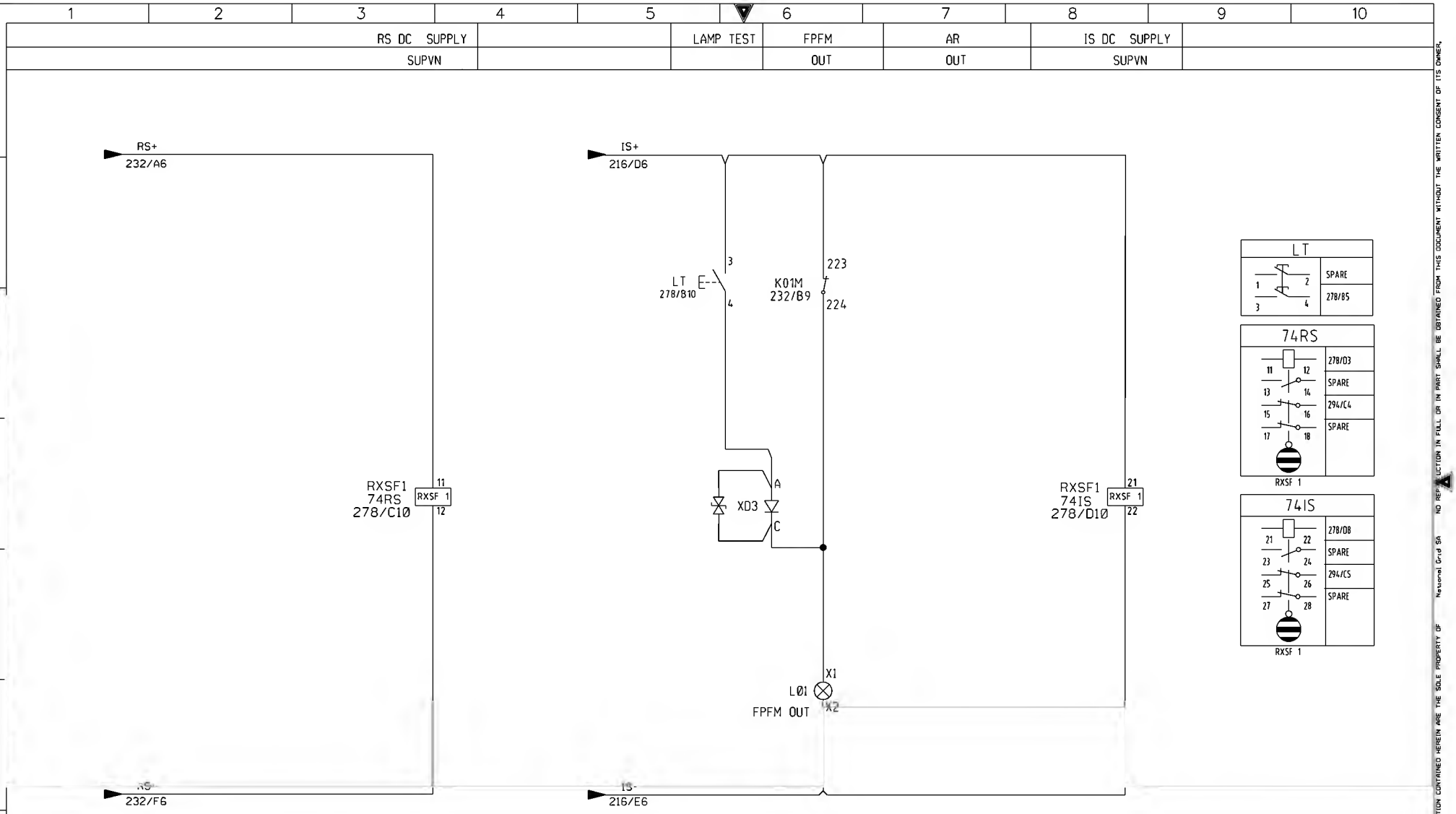

AS-BUILT BY _____ DATE _____	CONTRACT NO. 11131113/00	JOB ORDER NO. S-13656
	DRAWN BY RIZ CHECKED BY KVR	
	DATE STARTED 24.01.2013 DATE COMPLETED _____	
	OPRG. DEPT. CTPD ENG. DEPT. AUT-PSAC	

REV. NO.	DATE	DESCRIPTION
00	13 04	FOR APPROVAL

BUSBAR PROTN-2 TRIP RELAY CIRCUIT
132kV UGF-8710 RELAY PANEL-1 +R03.1
S/S 8709-132/13.8KV IN AL-KHARJ CITY
RIYADH SAUDI ARABIA

الشركة الوطنية لنقل الكهرباء
نقل الكهرباء
National Grid SA

INDEX	PLANT NO.	DRAWING NUMBER	SHEET NO. SHT	SHEET NO. CONT.	REV. NO.
-	C421	CD-322919	278	291	00

NG/D2-D (2012/01)
DMS VECTOR NGD200

THIS DRAWING AND THE INFORMATION CONTAINED HEREIN ARE THE SOLE PROPERTY OF National Grid SA NO REPRODUCTION IN FULL OR IN PART SHALL BE OBTAINED FROM THIS DOCUMENT WITHOUT THE WRITTEN CONSENT OF ITS OWNER.

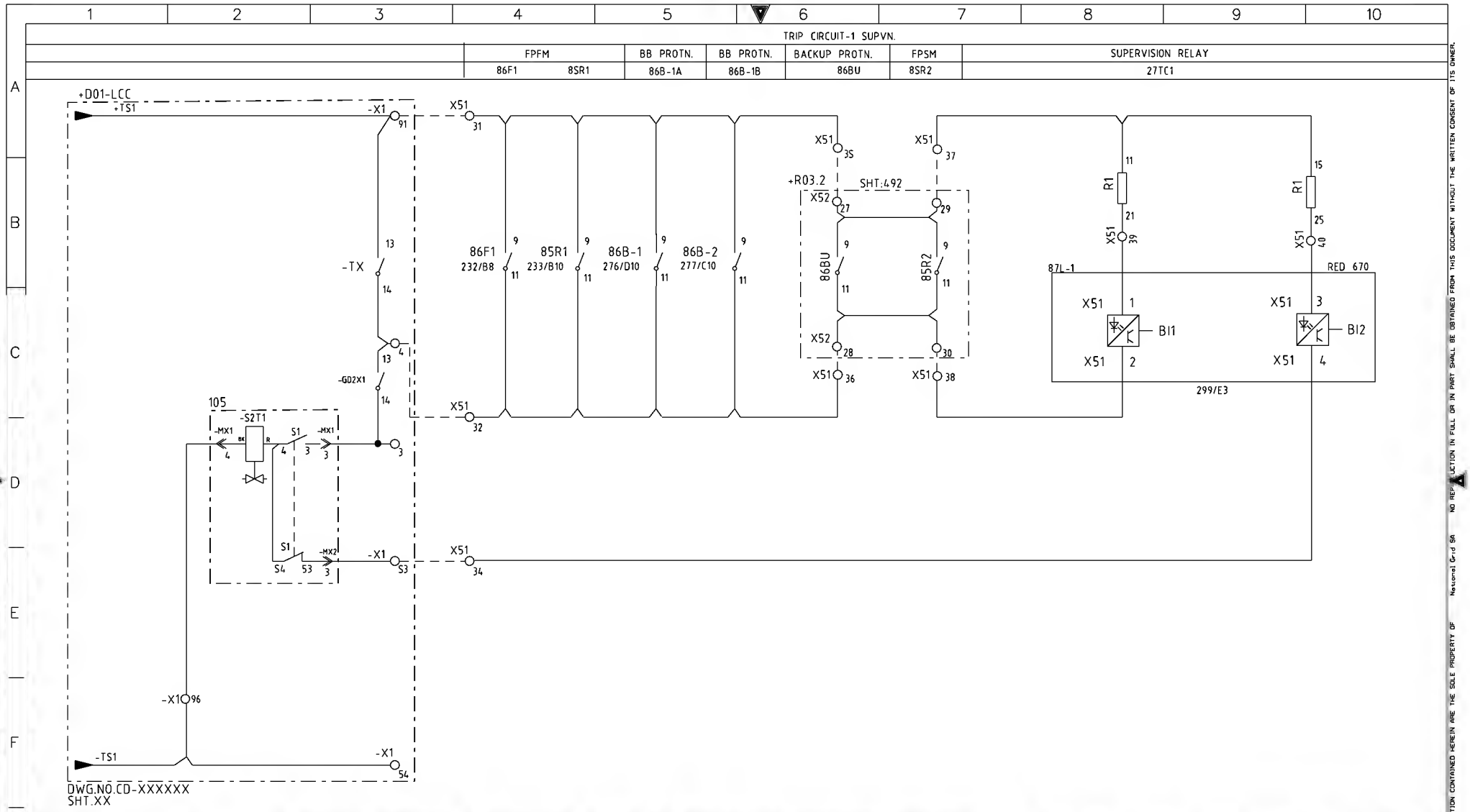

AS-BUILT BY	DATE	CONTRACT NO. 11131113/00	JOB ORDER NO. S-13656
00	13 04	FOR APPROVAL	
REV. NO.	DATE	DESCRIPTION	

DRAWN BY RIZ CHECKED BY KVR
DATE STARTED 24.01.2013 DATE COMPLETED
ORGG. DEPT. CTPD ENG. DEPT. AUT-PSAC

TRIP COIL-1 SUPERVSION CIRCUIT
132kV UGF-8710 RELAY PANEL-1 +R03.1
S/S 8709-132/13.8KV IN AL-KHARJ CITY
RIYADH SAUDI ARABIA

الشركة الوطنية لنقل الكهرباء
نقل الكهرباء
National Grid SA

INDEX	PLANT NO.	DRAWING NUMBER	SHEET NO. SHT	SHEET NO. CONT.	REV. NO.
-	C421	CD-322919	291	292	00

NG/D2-0 (2012/01)
DMS VECTOR NGD200

THIS DRAWING AND THE INFORMATION CONTAINED HEREIN ARE THE SOLE PROPERTY OF National Grid SA NO REPRODUCTION IN FULL OR IN PART SHALL BE OBTAINED FROM THIS DOCUMENT WITHOUT THE WRITTEN CONSENT OF ITS OWNER.

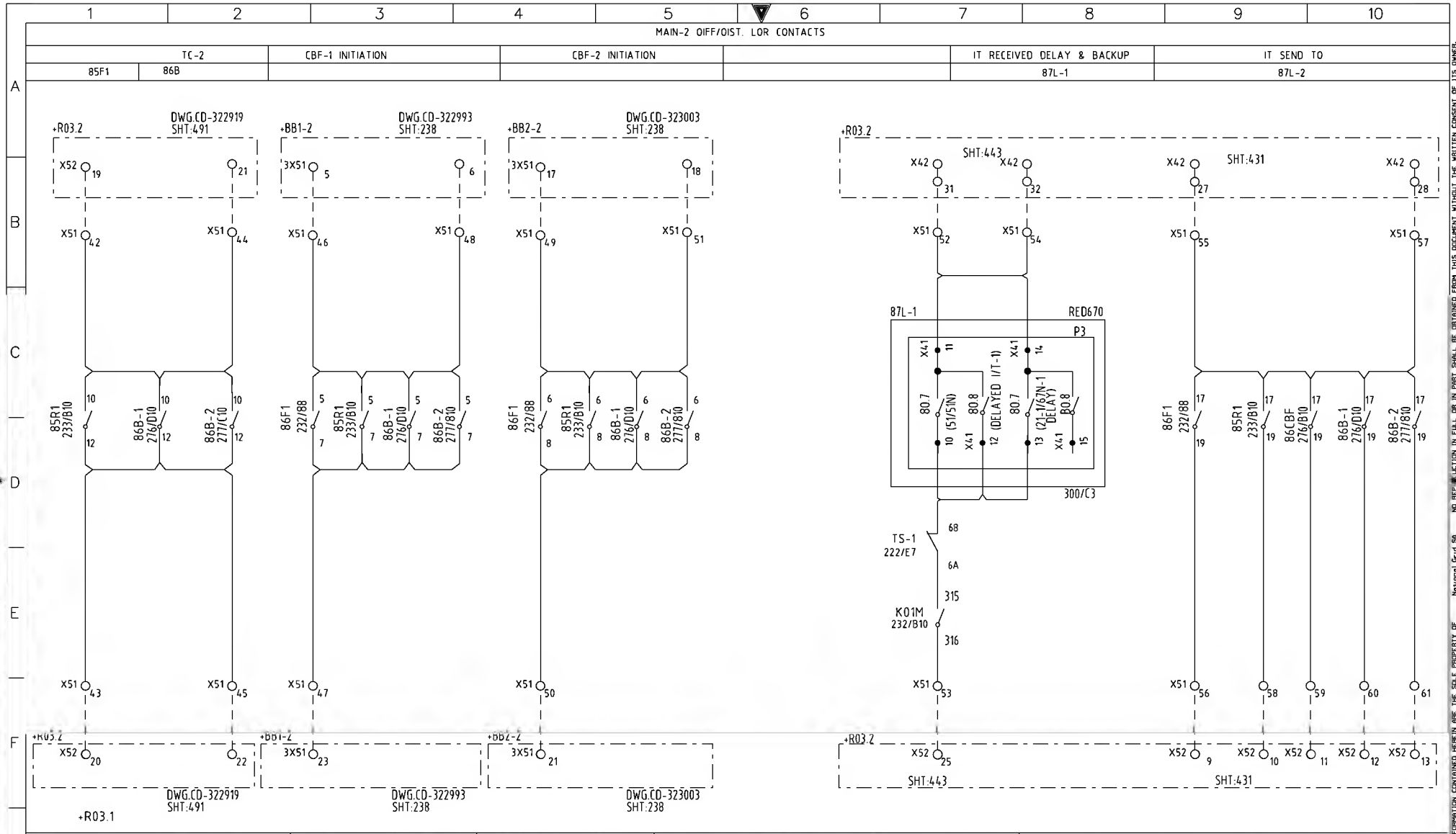

AS-BUILT BY	DATE	CONTRACT NO. 11131113/00	JOB ORDER NO. S-13656
		DRAWN BY RIZ	CHECKED BY KVR
00	13 04	FOR APPROVAL	DATE STARTED 24.01.2013 DATE COMPLETED
REV. NO.	DATE	DESCRIPTION	ORGG. DEPT. CTPD ENG. DEPT. AUT-PSAC

TRIP COIL-2/DELAY TRIP/CBF CIRCUIT
132kV UGF-8710 RELAY PANEL-1 +R03.1
S/S 8709-132/13.8KV IN AL-KHARJ CITY
RIYADH SAUDI ARABIA

الشركة الوطنية لنقل الكهرباء
نقل الكهرباء
National Grid SA

INDEX	PLANT NO.	DRAWING NUMBER	SHEET NO. SHT	SHEET NO. CONT.	REV. NO.
-	C421	CD-322919	292	293	00

NG/D2-0 (2012/01)
DMS VECTOR NGD200

THIS DRAWING AND THE INFORMATION CONTAINED HEREIN ARE THE SOLE PROPERTY OF National Grid SA NO REPRODUCTION IN FULL OR IN PART SHALL BE OBTAINED FROM THIS DOCUMENT WITHOUT THE WRITTEN CONSENT OF ITS OWNER.

CLOSE BLOCKING
PROTECTION

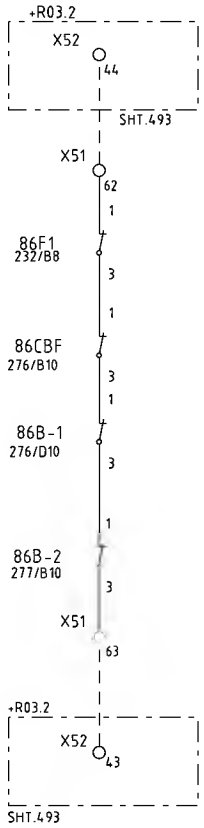

+R03.1

AS-BUILT BY _____ DATE _____	CONTRACT NO. 11131113/00	JOB ORDER NO. S-13656
	DRAWN BY RIZ	CHECKED BY KVR
00 / 13 04 / FOR APPROVAL	DATE STARTED 24.01.2013	DATE COMPLETED _____
REV. NO. / DATE / DESCRIPTION	DPRG. DEPT. CTPD	ENG. DEPT. AUT-PSAC

CLOSE BLOCK CIRCUIT
132kV UGF-8710 RELAY PANEL-1 +R03.1
S/S 8709-132/13.8KV IN AL-KHARJ CITY
RIYADH SAUDI ARABIA

الشركة الوطنية لنقل الكهرباء
نقل الكهرباء
National Grid SA

INDEX	PLANT NO.	DRAWING NUMBER	SHEET NO. SHT	SHEET NO. CONT.	REV. NO.
-	C421	CD-322919	293	294	00

NG/D2-D (2012/01)
DMS VECTOR NGD200

THIS DRAWING AND THE INFORMATION CONTAINED HEREIN ARE THE SOLE PROPERTY OF National Grid SA NO REPRODUCTION IN FULL OR IN PART SHALL BE OBTAINED FROM THIS DOCUMENT WITHOUT THE WRITTEN CONSENT OF ITS OWNER.

	FPFM											
	FPFM	DC SUPPLY	RS DC SUPPLY	IS DC SUPPLY	IT1 DC SUPPLY	TC1 DC SUPPLY	IT-1 RECV.	86F1	86CBF	86B-1	86B-2	FPFM
	FAULTY	FAULTY	FAULTY	FAULTY	FAULTY	FAIL	OPTD.	OPTD	OPTD	OPTD	OPTD	OUT

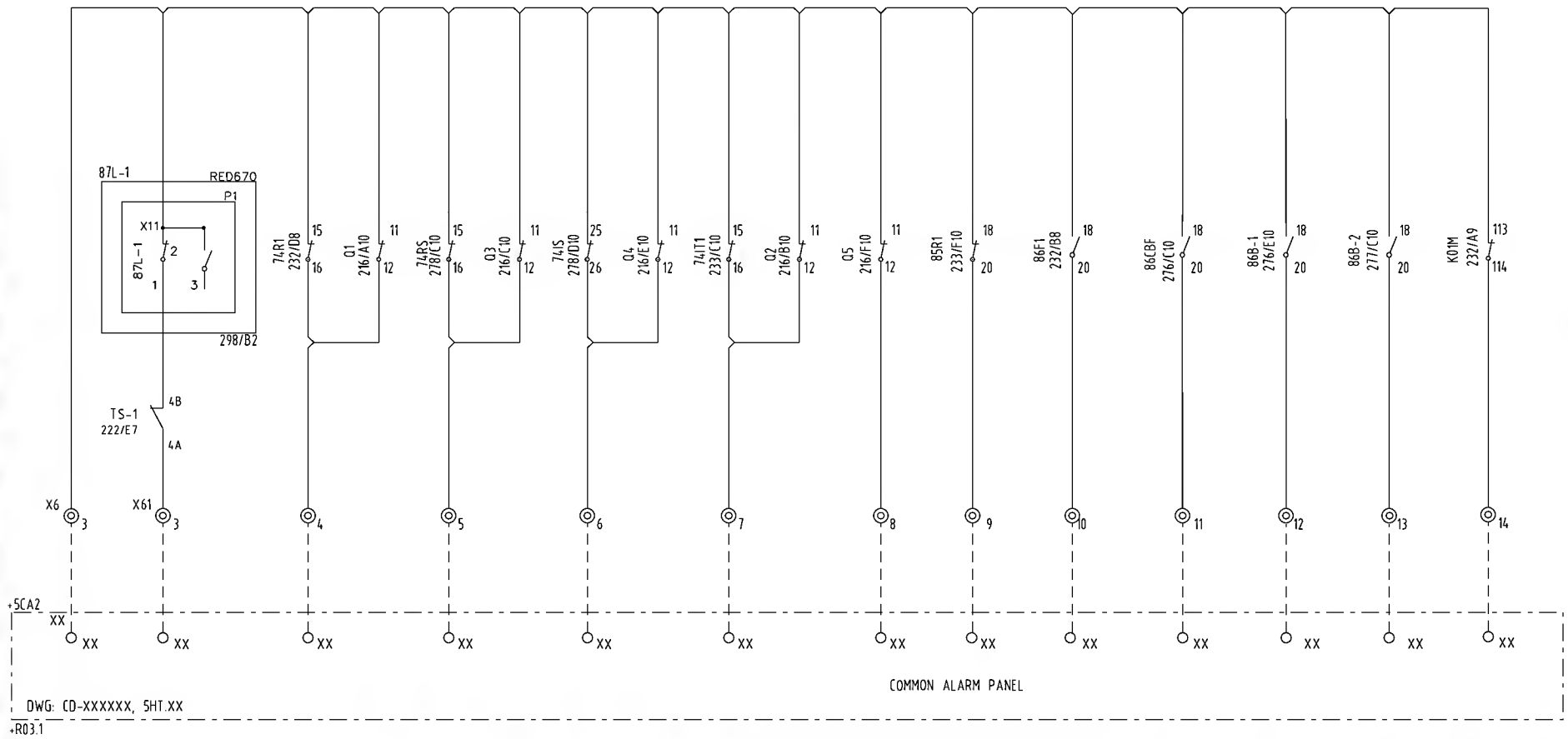

AS-BUILT BY _____ DATE _____	CONTRACT NO. 11131113/00	JOB ORDER NO. S-13656

REV. NO.	DATE	DESCRIPTION
00	13 04	FOR APPROVAL

DRAWN BY RIZ CHECKED BY KVR
DATE STARTED 24.01.2013 DATE COMPLETED _____
ORG. DEPT. CTPD ENG. DEPT. AUT-PSAC

COMMON ALARM CIRCUITS
132kV UGF-8710 RELAY PANEL-1 +R03.1
S/S 8709-132/13.8KV IN AL-KHARJ CITY
RIYADH SAUDI ARABIA

الشركة الوطنية لنقل الكهرباء
نقل الكهرباء
National Grid SA

INDEX	PLANT NO.	DRAWING NUMBER	SHEET NO. SHT	SHEET NO. CONT.	REV. NO.
-	C421	CD-322919	294	295	00

NG/D2-D (2012/01)
DMS VECTOR NGD200

THIS DRAWING AND THE INFORMATION CONTAINED HEREIN ARE THE SOLE PROPERTY OF National Grid SA NO REPRODUCTION IN FULL OR IN PART SHALL BE OBTAINED FROM THIS DOCUMENT WITHOUT THE WRITTEN CONSENT OF ITS OWNER.

SPARE

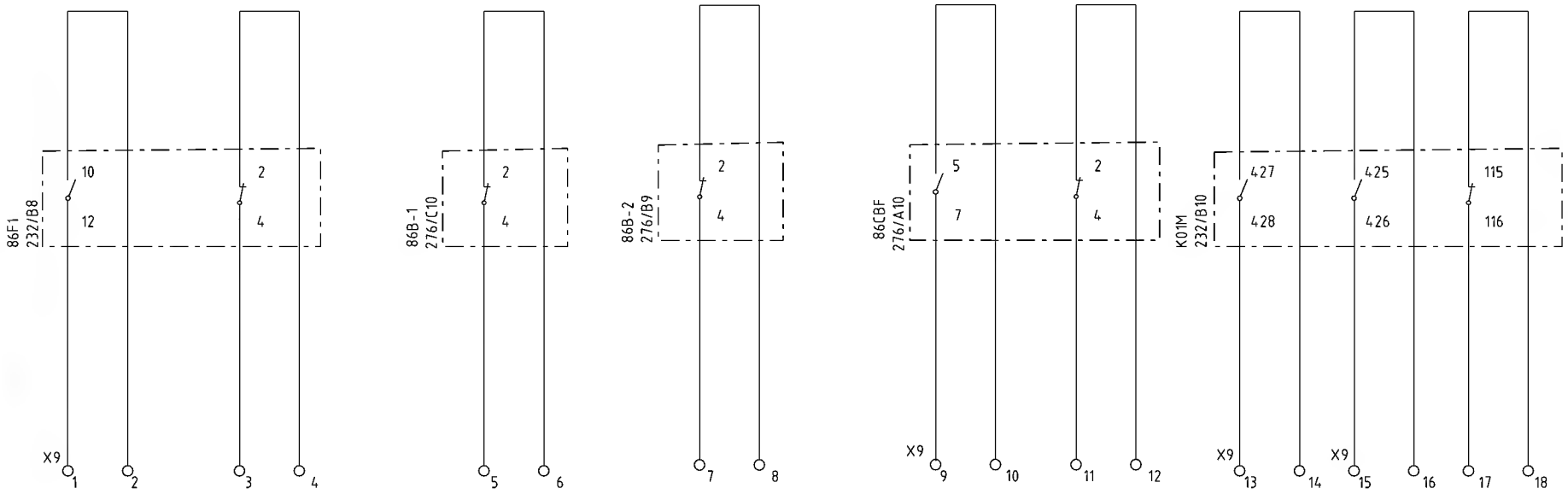

+R03.1

AS-BUILT BY _____ DATE _____	CONTRACT NO. 11131113/00	JOB ORDER NO. S-13656

REV. NO.	DATE	DESCRIPTION
00	13 04	FOR APPROVAL

DRAWN BY RIZ CHECKED BY KVR
DATE STARTED 24.01.2013 DATE COMPLETED _____
DPRG. DEPT. CTPD ENG. DEPT. AUT-PSAC

SPARE CONTACTS
132kV UGF-8710 RELAY PANEL-1 +R03.1
S/S 8709-132/13.8KV IN AL-KHARJ CITY
RIYADH SAUDI ARABIA

الشركة الوطنية لنقل الكهرباء
نقل الكهرباء
National Grid SA

INDEX	PLANT NO.	DRAWING NUMBER	SHEET NO. SHT	SHEET NO. CONT.	REV. NO.
-	C421	CD-322919	295	298	00

NG/D2-D (2012/01)
DMS VECTOR NGD200

THIS DRAWING AND THE INFORMATION CONTAINED HEREIN ARE THE SOLE PROPERTY OF National Grid SA NO REPRODUCTION IN FULL OR IN PART SHALL BE OBTAINED FROM THIS DOCUMENT WITHOUT THE WRITTEN CONSENT OF ITS OWNER.

B7L-1

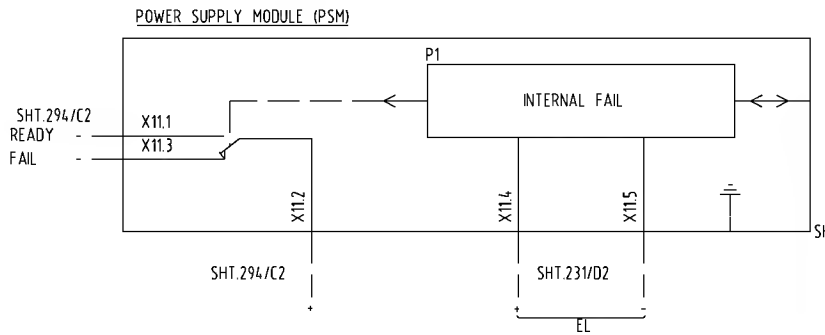

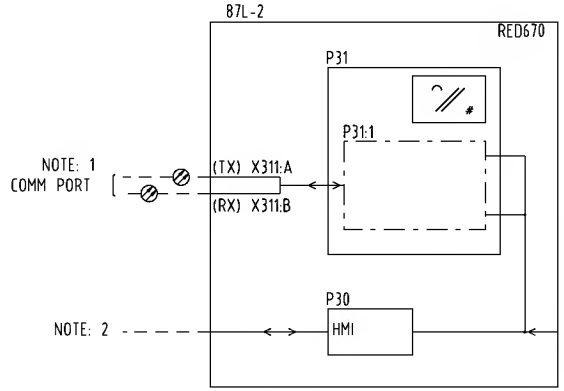

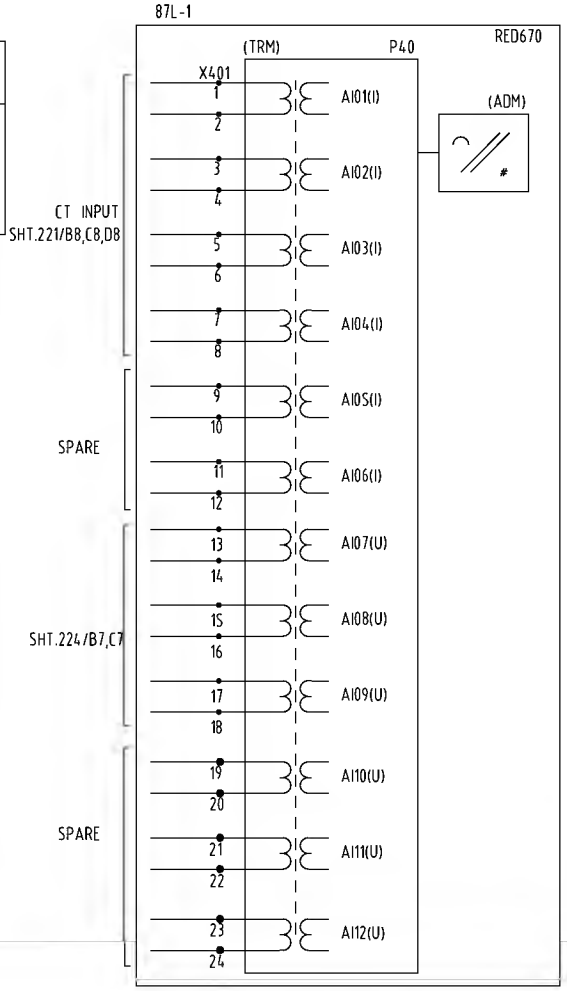

ABBREVIATIONS

TRM	TRANSFORMER INPUT MODULE
ADM	A/D CONVERSION MODULE
PSM	POWER SYPPLY MODULE
IOM	BINARY IN/OUT MODULE
BOM	BINARY OUTPUT MODULE
HMI	HUMAN MACHINE INTERFACE
BIM	BINARY INPUT MODULE

USED FOR TRIP ISOLATION (RTXP-24)

USED FOR VOLTAGE (RTXP-24)

USED FOR CT ISOLATION (RTXP-24)

NOTE:

1. OPTICAL ETHERNET MODULE 2 GLASS INTERFACES - IEC 61850
2. FRONT COMMUNICATION PORT, ETHERNET, RJ45 CONNECTORL

AS-BUILT BY ____ DATE ____	CONTRACT NO. 11131113/00	JOB ORDER NO. S-13656
REV. NO. / DATE / DESCRIPTION	DRAWN BY RIZ CHECKED BY KVR	BLOCK REFERENCE
00 / 13 04 / FOR APPROVAL	DATE STARTED 24.01.2013 DATE COMPLETED ____	132kV UGF-8710 RELAY PANEL-1 +R03.1
	OPRG. DEPT. CTPD ENG. DEPT. AUT-PSAC	S/S 8709-132/13.8KV IN AL-KHARJ CITY
		RIYADH SAUDI ARABIA

الشركة الوطنية لنقل الكهرباء

نقل الكهرباء National Grid SA

INDEX	PLANT NO.	DRAWING NUMBER	SHEET NO. SHT	SHEET NO. CONT.	REV. NO.
-	C421	CD-322919	298	299	00

NG/D2-0 (2012/01)

DMS VECTOR NGD200

THIS DRAWING AND THE INFORMATION CONTAINED HEREIN ARE THE SOLE PROPERTY OF National Grid SA NO REPRODUCTION IN FULL OR IN PART SHALL BE OBTAINED FROM THIS DOCUMENT WITHOUT THE WRITTEN CONSENT OF ITS OWNER.

B7L-1

BINARY INPUT CARD

87L-1 — BIM P3 — RED670 — LOCATION=P3

Source	Terminal	Signal	PLANT ADAPTED CONFIGURATION
	X31		
SHT.231/D3	1	BI.01	CB ON
SHT.231/D3	3	BI.02	CB OFF
SHT.231/D4	S	BI.03	104 ON
SHT.231/D4	7	BI.04	106 ON
SHT.231/OS	9	BI.05	VT MCB TRIP
SHT.231/OS	11	BI.06	CB READY
SHT.231/06	13	BI.07	86F1 OPTD.
SHT.231/D7	15	BI.08	8SR1 OPTD.
	X32		
SHT.231/DB,D9,D10	1	BI.09	86CBF OPTD.
	3	BI.10	86B-1 OPTD.
	5	BI.11	86B-2 OPTD.
	7	BI.12	86F2 OPTD.
	9	BI.13	86BU OPTD.
	11	BI.14	8SR2 OPTD.
	13	BI.15	FPFM OUT
SPARE	15	BI.16	SPARE

BINARY INPUT CARD

87L-1 — BIM PS — RED670 — LOCATION=PS

Source	Terminal	Signal	PLANT ADAPTED CONFIGURATION
	XS1		
SHT.291/C8,C9	1	BI.01	TSR
	3	BI.02	TSR
SPARE	S	BI.03	SPARE
	7	BI.04	SPARE
	9	BI.05	SPARE
	11	BI.06	SPARE
	13	BI.07	SPARE
	15	BI.08	SPARE
	XS2		
	1	BI.09	SPARE
	3	BI.10	SPARE
	S	BI.11	SPARE
	7	BI.12	SPARE
	9	BI.13	SPARE
	11	BI.14	SPARE
	13	BI.15	SPARE
	15	BI.16	SPARE

AS-BUILT BY _____ DATE _____ | CONTRACT NO. 11131113/00 | JOB ORDER NO. S-13656

REV. NO.	DATE	DESCRIPTION
00	13 04	FOR APPROVAL

DRAWN BY RIZ CHECKED BY KVR
DATE STARTED 24.01.2013 DATE COMPLETED _____
ORG. DEPT. CTPD ENG. DEPT. AUT-PSAC

BLOCK REFERENCE
132kV UGF-8710 RELAY PANEL-1 +R03.1
S/S 8709-132/13.8KV IN AL-KHARJ CITY
RIYADH SAUDI ARABIA

الشركة الوطنية لنقل الكهرباء
نقل الكهرباء
National Grid SA

INDEX	PLANT NO.	DRAWING NUMBER	SHEET NO. SHT	SHEET NO. CONT.	REV. NO.
-	C421	CD-322919	299	300	00

NG/D2-0 (2012/01)
DMS VECTOR NGD200

THIS DRAWING AND THE INFORMATION CONTAINED HEREIN ARE THE SOLE PROPERTY OF National Grid SA NO REPRODUCTION IN FULL OR IN PART SHALL BE OBTAINED FROM THIS DOCUMENT WITHOUT THE WRITTEN CONSENT OF ITS OWNER.

87L-1

BINARY OUTPUT CARD

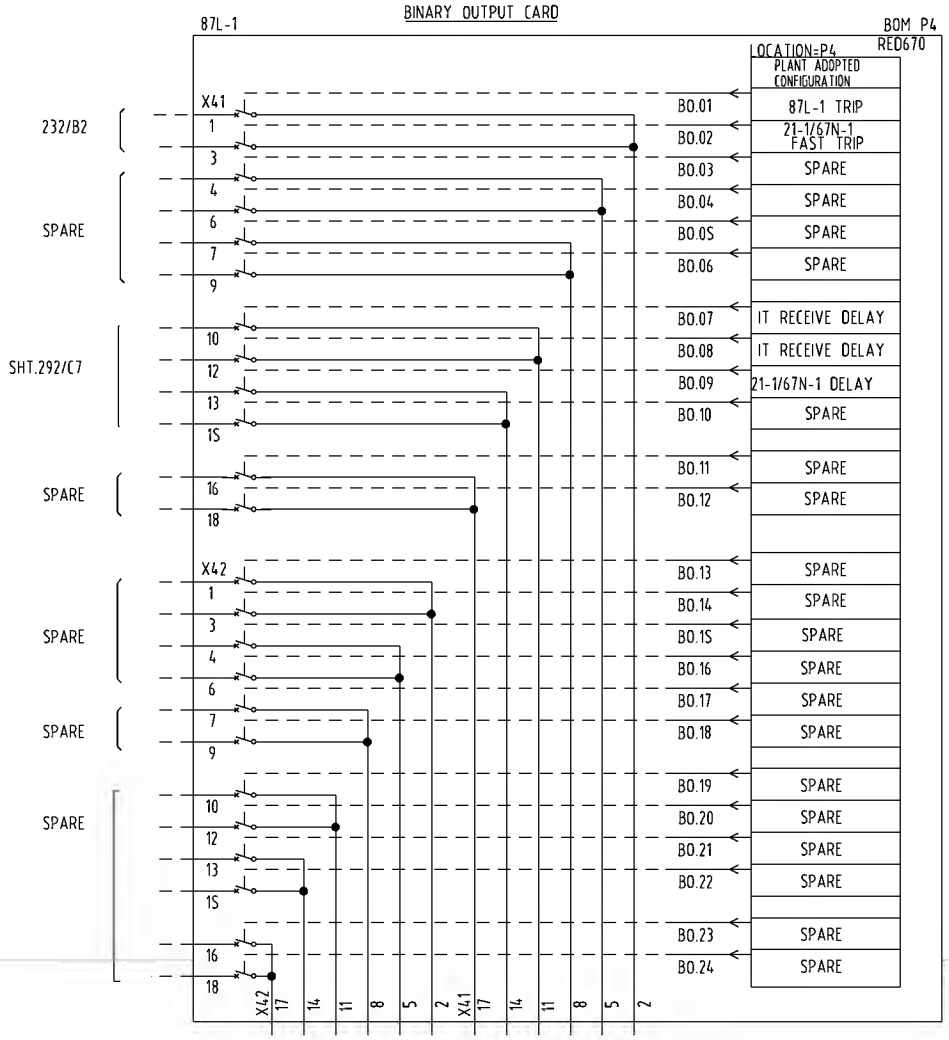

AS-BUILT BY _____ DATE _____	CONTRACT NO. 11131113/00	JOB ORDER NO. S-13656
REV. NO.	DATE	DESCRIPTION
00	13 04	FOR APPROVAL

DRAWN BY RIZ CHECKED BY KVR

DATE STARTED 24.01.2013 DATE COMPLETED _____

ORG. DEPT. CTPD ENG. DEPT. AUT-PSAC

BLOCK REFERENCE

132kV UGF-8710 RELAY PANEL-1 +R03.1

S/S 8709-132/13.8KV IN AL-KHARJ CITY

RIYADH SAUDI ARABIA

الشركة الوطنية لنقل الكهرباء

نقل الكهرباء National Grid SA

INDEX	PLANT NO.	DRAWING NUMBER	SHEET NO. SHT	SHEET NO. CONT.	REV. NO.
-	C421	CD-322919	300	301	00

NG/D2-0 (2012/01)

DMS VECTOR NGD200

THIS DRAWING AND THE INFORMATION CONTAINED HEREIN ARE THE SOLE PROPERTY OF National Grid SA NO REPRODUCTION IN FULL OR IN PART SHALL BE OBTAINED FROM THIS DOCUMENT WITHOUT THE WRITTEN CONSENT OF ITS OWNER.

REFERENCE	X1 CT CKT.
221/C5	1
221/C5	2
221/C5	3
221/C5	4
221/D5	5
221/D5	6
221/D5	7
221/D5	8
221/D5	9
SPARE	10

REFERENCE	XTJ T.JACK
211/D3	1
211/D3	2
211/D3	3
211/D3	4
SPARE	5

REFERENCE	XSH SPACE HEATER
211/E6	1
211/F6	2
SPARE	3

REFERENCE	X6 ALM. CKT.
212/C5	1
212/C5	2
294//E1	3

REFERENCE	X2 VT CKT.
222/B4	1
222/B4	2
222/C4	3
222/C4	4
SPARE	5

REFERENCE	X3 AC CKT.
211/A3	1
211/C3	2
211/A3	3
211/C3	4
211/B3	5
211/C3	6
211/B3	7
211/C3	8
SPARE	9
SPARE	10

REFERENCE	X61 ALM. CKT.
212/E5	1
212/E5	2
294/E1	3
294/E2	4
294/E4	5
294/E6	6
294/E6	7
294/E7	8
294/E7	9
SPARE	10
SPARE	11
SPARE	12
SPARE	13
SPARE	14
SPARE	15

REFERENCE	X41 DC CKTS.
216/B3	1
216/B3	2
216/B3	3
216/C3	4
216/C3	5
216/C3	6
216/C7	7
216/C7	8
216/C7	9
216/C7	10
216/D3	11
216/D3	12
216/D7	13
216/D7	14
216/D7	15
216/D7	16
216/E3	17
216/E3	18
SPARE	19
SPARE	20
231/B3	21
231/B4	22
231/B4	23
231/B5	24
231/B5	25
231/B6	26
231/B8	27
231/B9	28
SPARE	29
SPARE	30
SPARE	31

REFERENCE	X51 CON & PROTN CKTS.
216/E7	1
216/E7	2
231/D3	3
231/D4	4
231/D4	5
231/D5	6
231/D6	7
231/D6	8
231/D6	9
231/D7	10
231/D8	11
SPARE	12
SPARE	13
SPARE	14
276/A2	15
276/F2	16
276/A7	17
276/F7	18
276/A2	19
276/E2	20
276/A4	21
276/E4	22
276/A5	23
276/E5	24
277/A4	25
277/F4	26
277/A7	27
277/F7	28
277/A5	29
277/F5	30
291/A4	31
291/C4	32
291/E4	33
291/A6	34
291/C6	35
291/A7	36
291/C7	37
291/A8	38
291/B8	39
291/A10	40
291/B10	41
292/B1	42
292/F1	43
292/B2	44
292/F2	45
292/B3	46
292/F3	47
292/B4	48
292/B5	49
292/F5	50

REFERENCE	X51 CON & PROTN CKTS
292/B6	51
292/B7	52
292/F7	53
292/B8	54
292/B9	55
292/F9	56
292/B10	57
292/F10	58
293/B4	59
293/E4	60
SPARE	61
SPARE	62
SPARE	63
SPARE	64
SPARE	65

REFERENCE	X9 SPARE
295/E1	1
295/E1	2
295/E2	3
295/E2	4
295/E4	5
295/E4	6
295/E5	7
295/E5	8
295/E6	9
295/E6	10
295/E7	11
296/E7	12
295/E8	13
295/E8	14
295/E9	15
295/E9	16
SPARE	17
SPARE	18
SPARE	19
SPARE	20

AS-BUILT BY	DATE	CONTRACT NO. 11131113/00	JOB ORDER NO. S-13656
00	13 04	FOR APPROVAL	
REV. NO.	DATE	DESCRIPTION	

DRAWN BY RIZ CHECKED BY KVR
DATE STARTED 24.01.2013 DATE COMPLETED
ORG. DEPT. CTPD ENG. DEPT. AUT-PSAC

TERMINAL BLOCKS PANEL +R01.1
132kV UGF-8710 RELAY PANEL-1 +R03.1
S/S 8709-132/13.8KV IN AL-KHARJ CITY
RIYADH SAUDI ARABIA

الشركة الوطنية لنقل الكهرباء
نقل الكهرباء
National Grid SA

INDEX	PLANT NO.	DRAWING NUMBER	SHEET NO. SHT	SHEET NO. CONT.	REV. NO.
-	C421	CD-322919	301	411	00

NG/D2-0 (2012/01)
DMS VECTOR NGD200

THIS DRAWING AND THE INFORMATION CONTAINED HEREIN ARE THE SOLE PROPERTY OF National Grid SA NO REPRODUCTION IN FULL OR IN PART SHALL BE OBTAINED FROM THIS DOCUMENT WITHOUT THE WRITTEN CONSENT OF ITS OWNER.

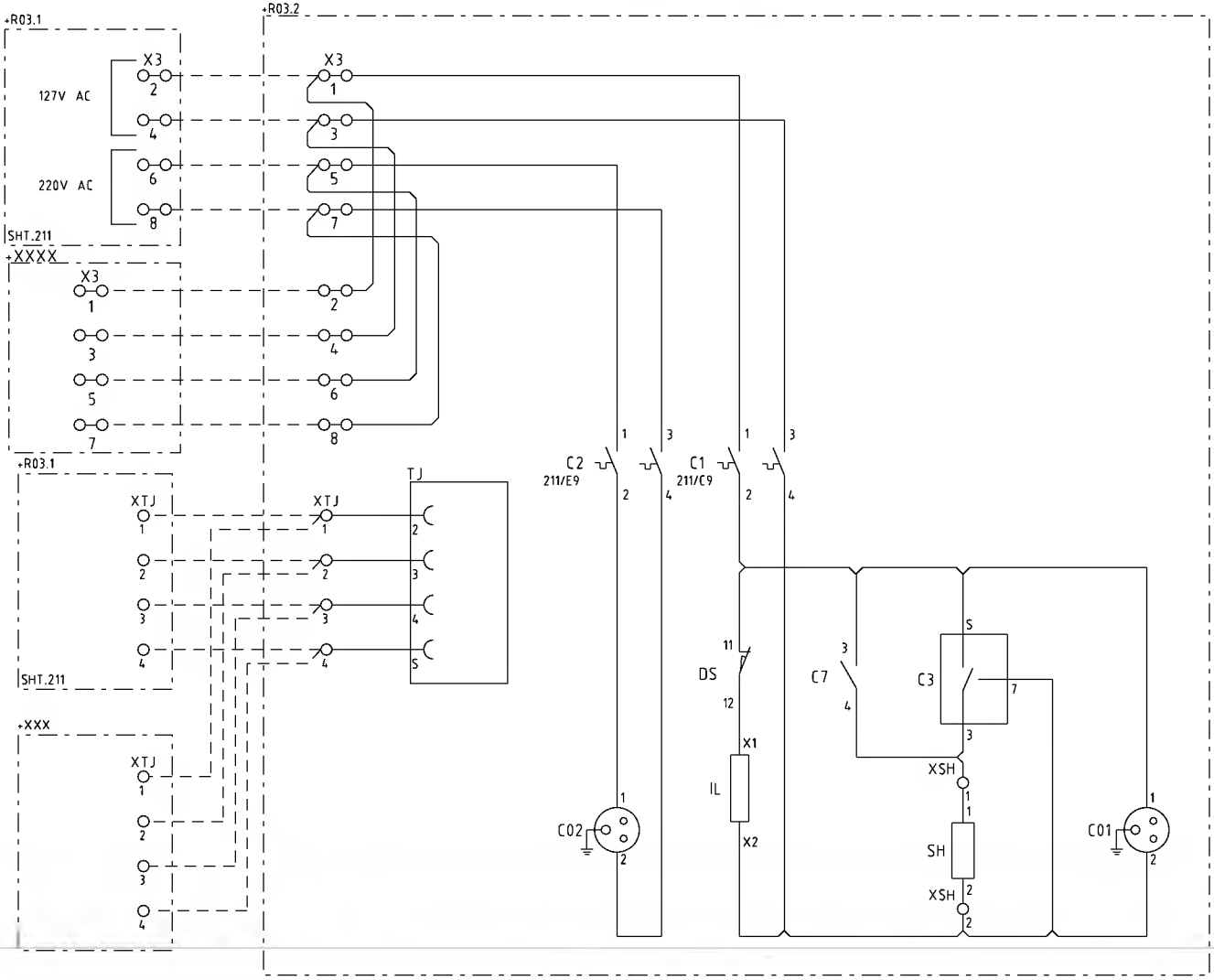

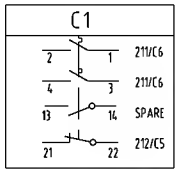

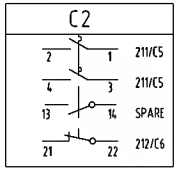

AS-BUILT BY _____ DATE _____	CONTRACT NO. 11131113/00	JOB ORDER NO. S-13656	AC SUPPLY FOR ILLUMINATION &POWER SOCKET	الشركة الوطنية لنقل الكهرباء — نقل الكهرباء National Grid SA
	DRAWN BY RIZ	CHECKED BY KVR	132kV UGF-8710 RELAY PANEL-1/2	
00 / 13 04 / FOR APPROVAL	DATE STARTED 24.01.2013	DATE COMPLETED	S/S 8709-132/13.8KV IN AL-KHARJ CITY	
REV. NO. / DATE / DESCRIPTION	ORGG. DEPT. CTPD	ENG. DEPT. AUT-PSAC	RIYADH SAUDI ARABIA	

INDEX	PLANT NO.	DRAWING NUMBER	SHEET NO. SHT	SHEET NO. CONT.	REV. NO.
-	C421	CD-322919	411	412	00

NG/D2-0 (2012/01)

DMS | VECTOR | NGD200

THIS DRAWING AND THE INFORMATION CONTAINED HEREIN ARE THE SOLE PROPERTY OF National Grid SA NO REPRODUCTION IN FULL OR IN PART SHALL BE OBTAINED FROM THIS DOCUMENT WITHOUT THE WRITTEN CONSENT OF ITS OWNER.

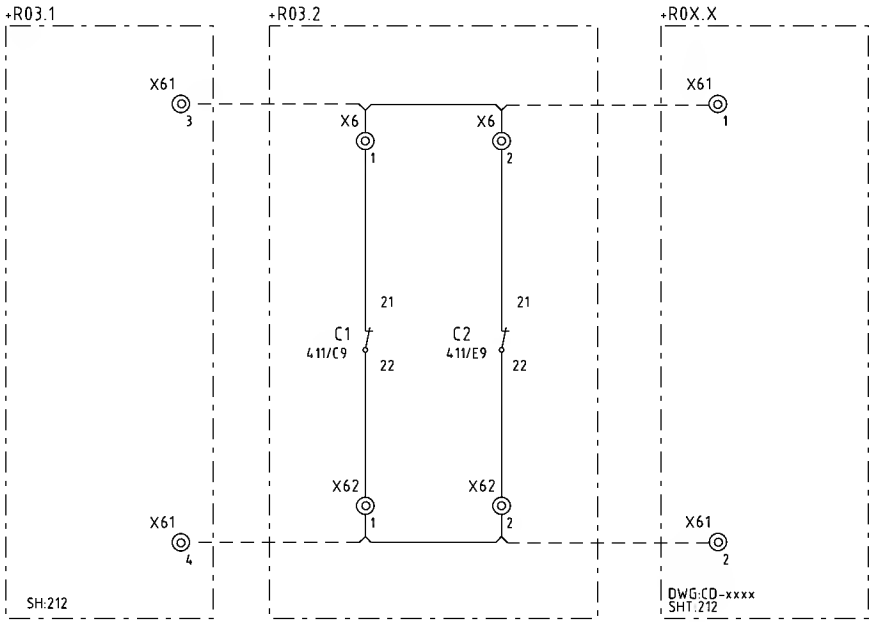

AS-BUILT BY _____ DATE _____	CONTRACT NO. 11131113/00	JOB ORDER NO. S-13656	AC MCB AUX CONTACTS	الشركة الوطنية لنقل الكهرباء — نقل الكهرباء National Grid SA
	DRAWN BY RIZ	CHECKED BY KVR	132kV UGF-8710 RELAY PANEL-2 +R03.2	
00 / 13 04 / FOR APPROVAL	DATE STARTED 24.01.2013	DATE COMPLETED _____	S/S 8709-132/13.8KV IN AL-KHARJ CITY	
REV. NO. / DATE / DESCRIPTION	ORG. DEPT. CTPD	ENG. DEPT. AUT-PSAC	RIYADH SAUDI ARABIA	

INDEX	PLANT NO.	DRAWING NUMBER	SHEET NO. SHT	SHEET NO. CONT.	REV. NO.
-	C421	CD-322919	412	416	00

NG/D2-0 (2012/01)

DMS | VECTOR | NGD200

THIS DRAWING AND THE INFORMATION CONTAINED HEREIN ARE THE SOLE PROPERTY OF National Grid SA NO REPRODUCTION IN FULL OR IN PART SHALL BE OBTAINED FROM THIS DOCUMENT WITHOUT THE WRITTEN CONSENT OF ITS OWNER.

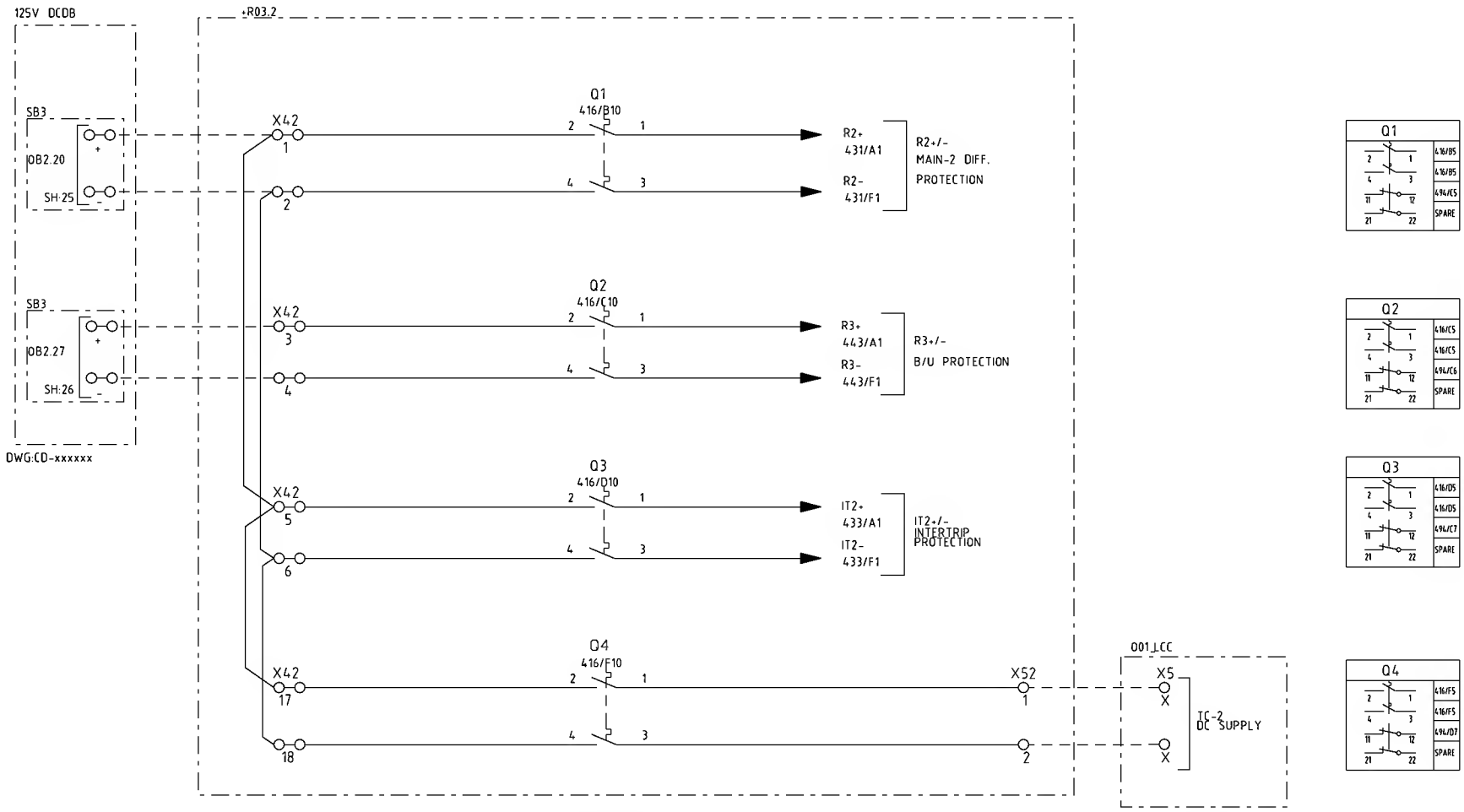

AS-BUILT BY _____ DATE _____	CONTRACT NO. 11131113/00	JOB ORDER NO. S-13656	DC SUPPLY DISTRIBUTION	الشركة الوطنية لنقل الكهرباء — نقل الكهرباء National Grid SA
	DRAWN BY RIZ	CHECKED BY KVR	132kV UGF-8710 RELAY PANEL-2 +R03.2	
00 / 13 04 / FOR APPROVAL	DATE STARTED 24.01.2013	DATE COMPLETED	S/S 8709-132/13.8KV IN AL-KHARJ CITY	INDEX - / PLANT NO. C421 / DRAWING NUMBER CD-322919 / SHEET NO. SHT 416 CONT. 421 / REV. NO. 00
REV. NO. / DATE / DESCRIPTION	ORIG. DEPT. CTPD	ENG. DEPT. AUT-PSAC	RIYADH SAUDI ARABIA	

NG/D2-0 (2012/01)

DMS | VECTOR | NGD200

THIS DRAWING AND THE INFORMATION CONTAINED HEREIN ARE THE SOLE PROPERTY OF National Grid SA NO REPRODUCTION IN FULL OR IN PART SHALL BE OBTAINED FROM THIS DOCUMENT WITHOUT THE WRITTEN CONSENT OF ITS OWNER.

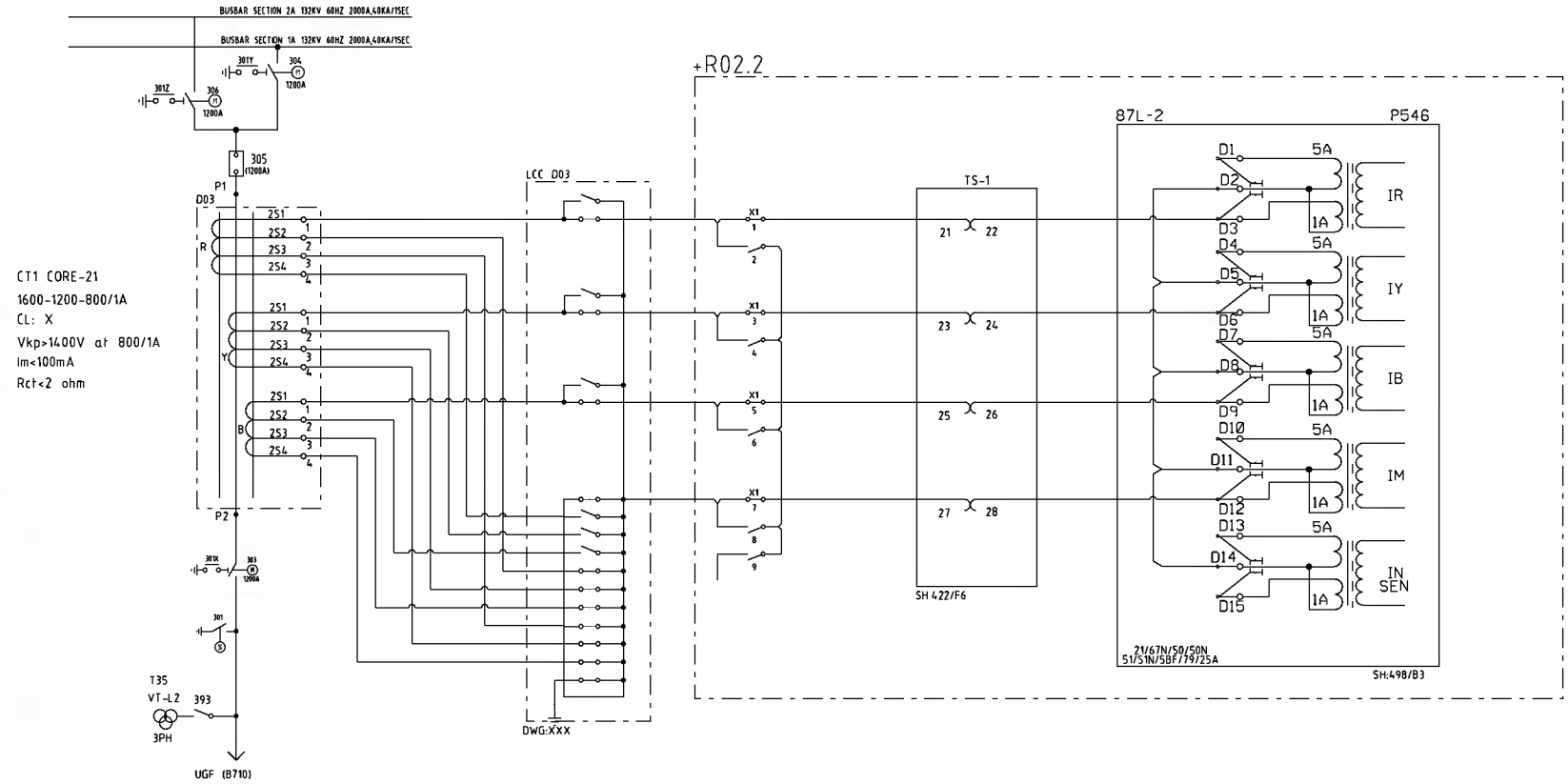

AS-BUILT BY _____ DATE _____	CONTRACT NO. 11131113/00	JOB ORDER NO. S-13656
	DRAWN BY RIZ	CHECKED BY KVR
	DATE STARTED 24.01.2013	DATE COMPLETED _____
	ORGG. DEPT. CTPD	ENG. DEPT. AUT-PSAC

REV. NO.	DATE	DESCRIPTION
00	13 04	FOR APPROVAL

CURRENT TRANSFORMER INPUTS -87L-2

132kV UGF-8710 RELAY PANEL-2 +R03.2

S/S 8709-132/13.8KV IN AL-KHARJ CITY

RIYADH SAUDI ARABIA

الشركة الوطنية لنقل الكهرباء

نقل الكهرباء
National Grid SA

INDEX	PLANT NO.	DRAWING NUMBER	SHEET NO. SHT	SHEET NO. CONT.	REV. NO.
-	C421	CD-322919	421	422	00

NG/D2-0 (2012/01)

DMS | VECTOR | NGD200

THIS DRAWING AND THE INFORMATION CONTAINED HEREIN ARE THE SOLE PROPERTY OF National Grid SA NO REPRODUCTION IN FULL OR IN PART SHALL BE OBTAINED FROM THIS DOCUMENT WITHOUT THE WRITTEN CONSENT OF ITS OWNER.

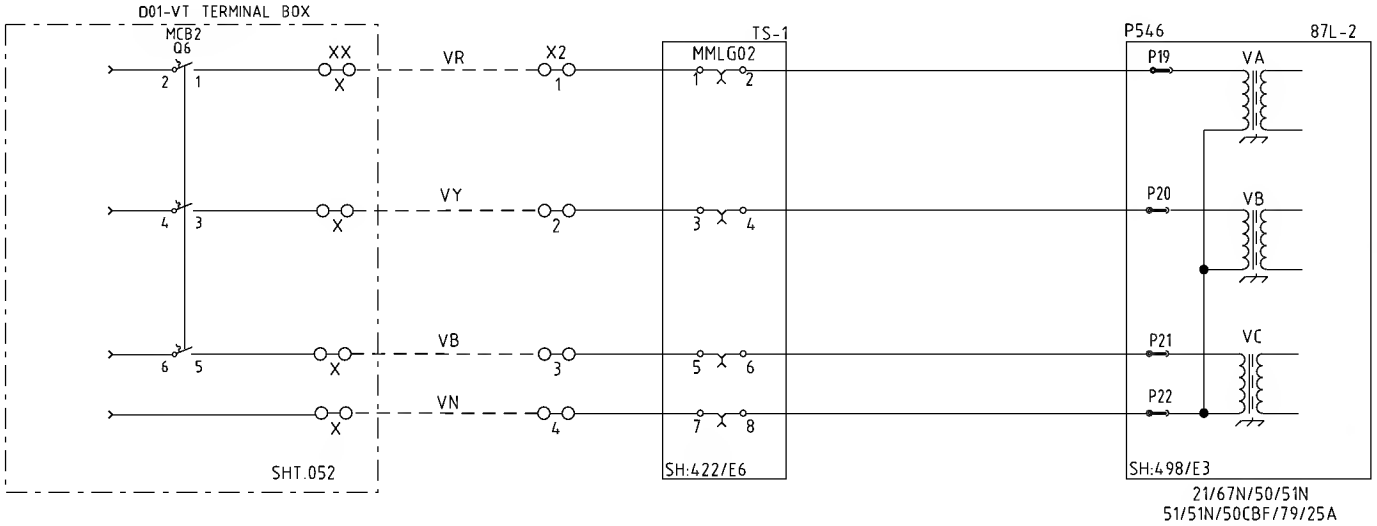

TS-1	
1 – 2	422/A8
3 – 4	422/B8
5 – 6	422/C8
7 – 8	422/D8
9 – 10	443/D5
11 – 12	495/D3
13 – 14	431/C2
15 – 16	431/F2
17 – 18	432/C1
19 – 20	433/C2
21 – 22	421/B6
23 – 24	421/C6
25 – 26	421/D6
27 – 28	421/D6

AS-BUILT BY _____ DATE _____ | CONTRACT NO. 11131113/00 | JOB ORDER NO. S-13656

REV. NO.	DATE	DESCRIPTION
00	13 04	FOR APPROVAL

DRAWN BY RIZ CHECKED BY KVR
DATE STARTED 24.01.2013 DATE COMPLETED _____
DPRG. DEPT. CTPD ENG. DEPT. AUT-PSAC

VOLTAGE TRANSFORMER INPUTS -87L-2
132kV UGF-8710 RELAY PANEL-2 +R03.2
S/S 8709-132/13.8KV IN AL-KHARJ CITY
RIYADH SAUDI ARABIA

الشركة الوطنية لنقل الكهرباء
نقل الكهرباء
National Grid SA

INDEX	PLANT NO.	DRAWING NUMBER	SHEET NO. SHT	SHEET NO. CONT.	REV. NO.
-	C421	CD-322919	422	423	00

NG/D2-0 (2012/01)
DMS VECTOR NGD200

THIS DRAWING AND THE INFORMATION CONTAINED HEREIN ARE THE SOLE PROPERTY OF National Grid SA NO REPRODUCTION IN FULL OR IN PART SHALL BE OBTAINED FROM THIS DOCUMENT WITHOUT THE WRITTEN CONSENT OF ITS OWNER.

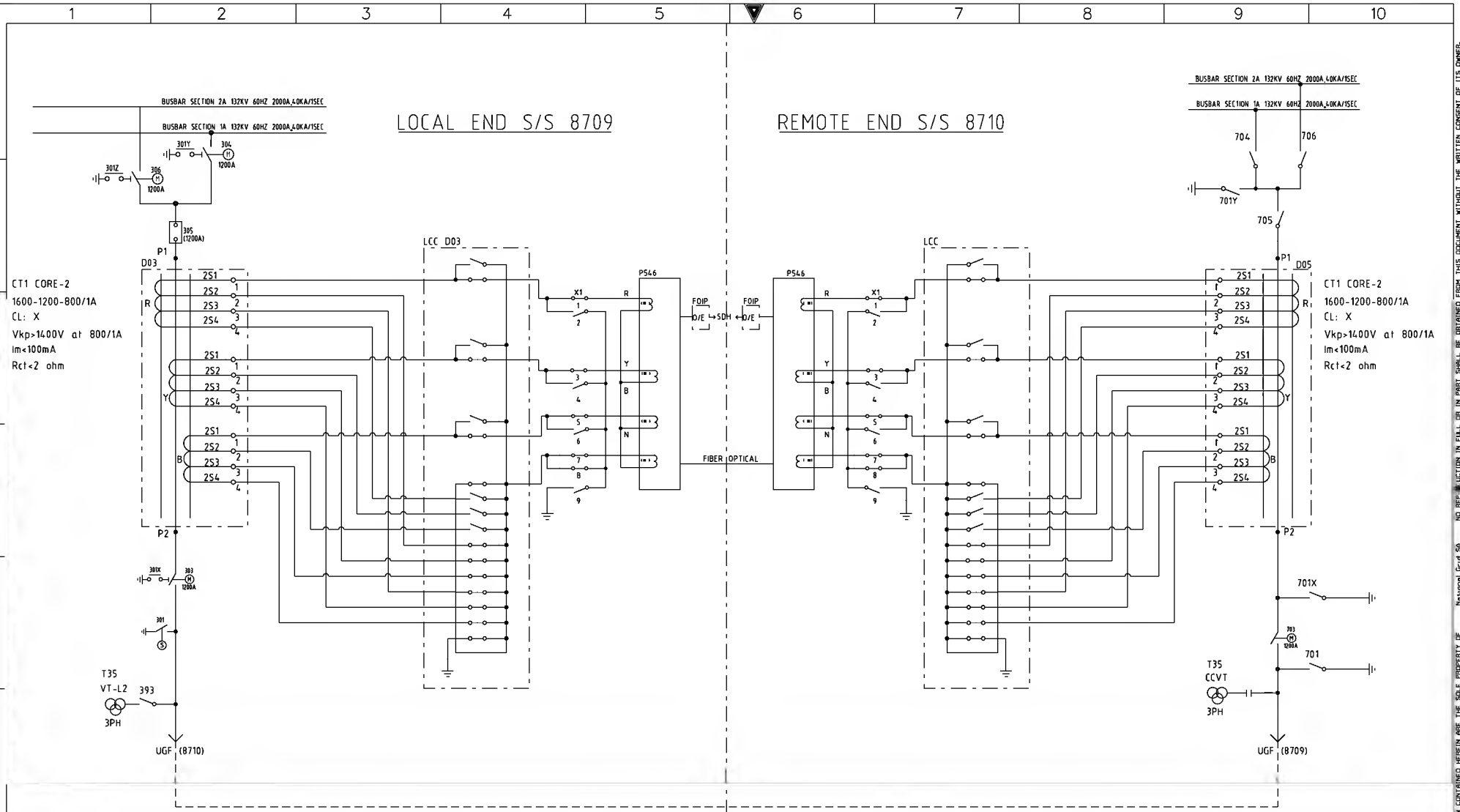

AS-BUILT BY _____ DATE _____	CONTRACT NO. 11131113/00	JOB ORDER NO. S-13656
00 / 13 04 / FOR APPROVAL (REV. NO. / DATE / DESCRIPTION)	DRAWN BY RIZ CHECKED BY KVR	DATE STARTED 24.01.2013 DATE COMPLETED _____
	OPRG. DEPT. CTPD ENG. DEPT. AUT-PSAC	

COMMUNICATION CIRCUITS
132kV UGF-8710 RELAY PANEL-2 +R03.2
S/S 8709-132/13.8KV IN AL-KHARJ CITY
RIYADH SAUDI ARABIA

الشركة الوطنية لنقل الكهرباء
نقل الكهرباء
National Grid SA

INDEX	PLANT NO.	DRAWING NUMBER	SHEET NO. SHT	SHEET NO. CONT.	REV. NO.
-	C421	CD-322919	423	431	00

NG/D2-D (2012/01)
DMS VECTOR NGD200

THIS DRAWING AND THE INFORMATION CONTAINED HEREIN ARE THE SOLE PROPERTY OF National Grid SA NO REPRODUCTION IN FULL OR IN PART SHALL BE OBTAINED FROM THIS DOCUMENT WITHOUT THE WRITTEN CONSENT OF ITS OWNER.

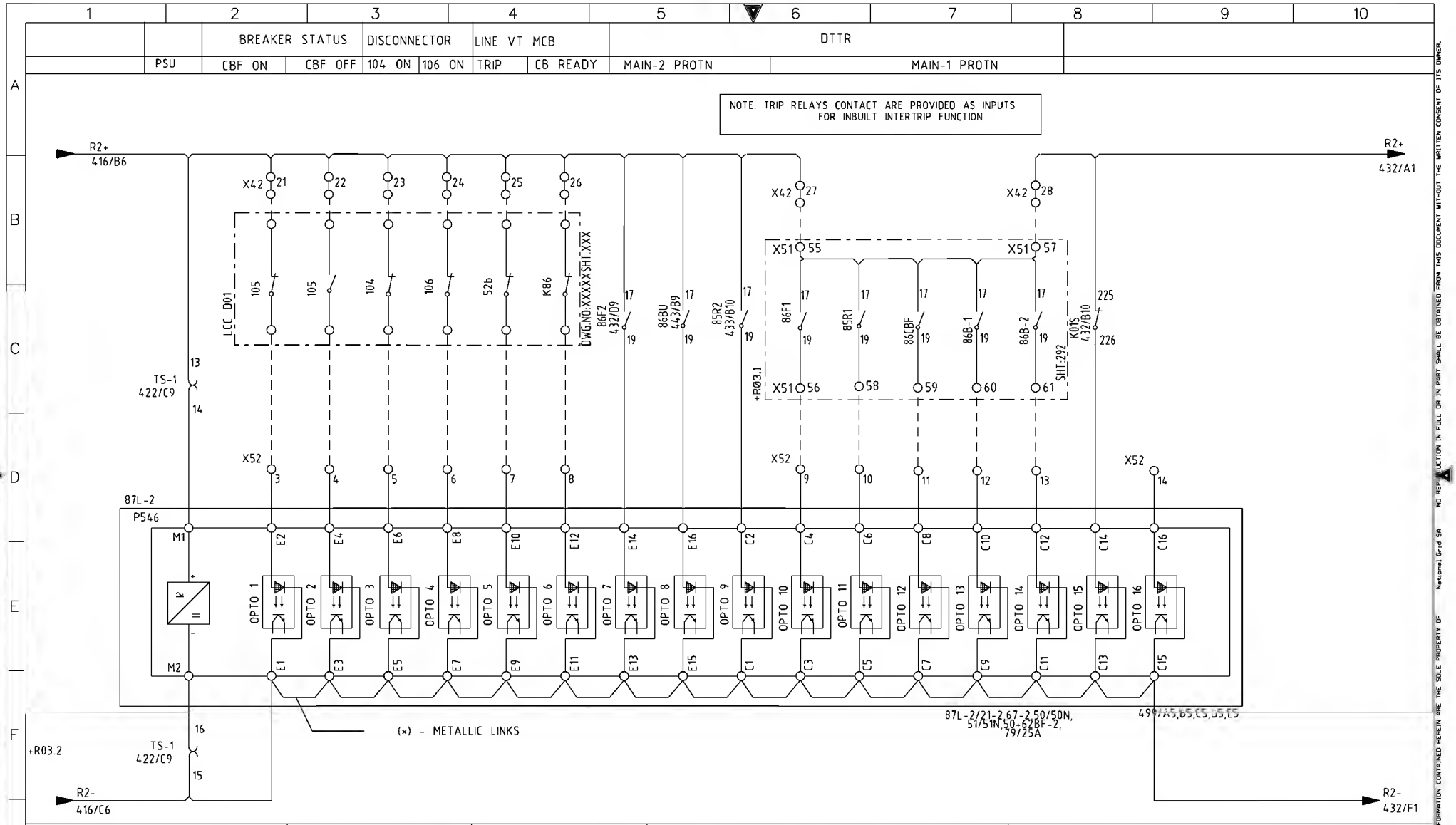

AS-BUILT BY _____ DATE _____	CONTRACT NO. 11131113/00	JOB ORDER NO. S-13656	MAIN-2 PROTN. 87L-2 RELAY- BINARY INPUTS	الشركة الوطنية لنقل الكهرباء	نقل الكهرباء National Grid SA
	DRAWN BY RIZ	CHECKED BY KVR	132kV UGF-8710 RELAY PANEL-2 +R03.2		
00 / 13 04 / FOR APPROVAL	DATE STARTED 24.01.2013	DATE COMPLETED	S/S 8709-132/13.8KV IN AL-KHARJ CITY	INDEX - / PLANT NO. C421 / DRAWING NUMBER CD-322919	SHEET NO. SHT 431 CONT. 432 / REV. NO. 00
REV. NO. / DATE / DESCRIPTION	OPRG. DEPT. CTPD	ENG. DEPT. AUT-PSAC	RIYADH SAUDI ARABIA		

NG/D2-0 (2012/01)

DMS | VECTOR | NGD200

THIS DRAWING AND THE INFORMATION CONTAINED HEREIN ARE THE SOLE PROPERTY OF National Grid SA NO REPRODUCTION IN FULL OR IN PART SHALL BE OBTAINED FROM THIS DOCUMENT WITHOUT THE WRITTEN CONSENT OF ITS OWNER.

OHL PROTECTION TRIP - 86F2			FPSM		
LINE DIFFL. PROTN.		86F2	FROM RELAY PANEL		DC SUPVN
87L1	21-2/67N-2 FAST	RESET	IN	OUT	SUPPLY

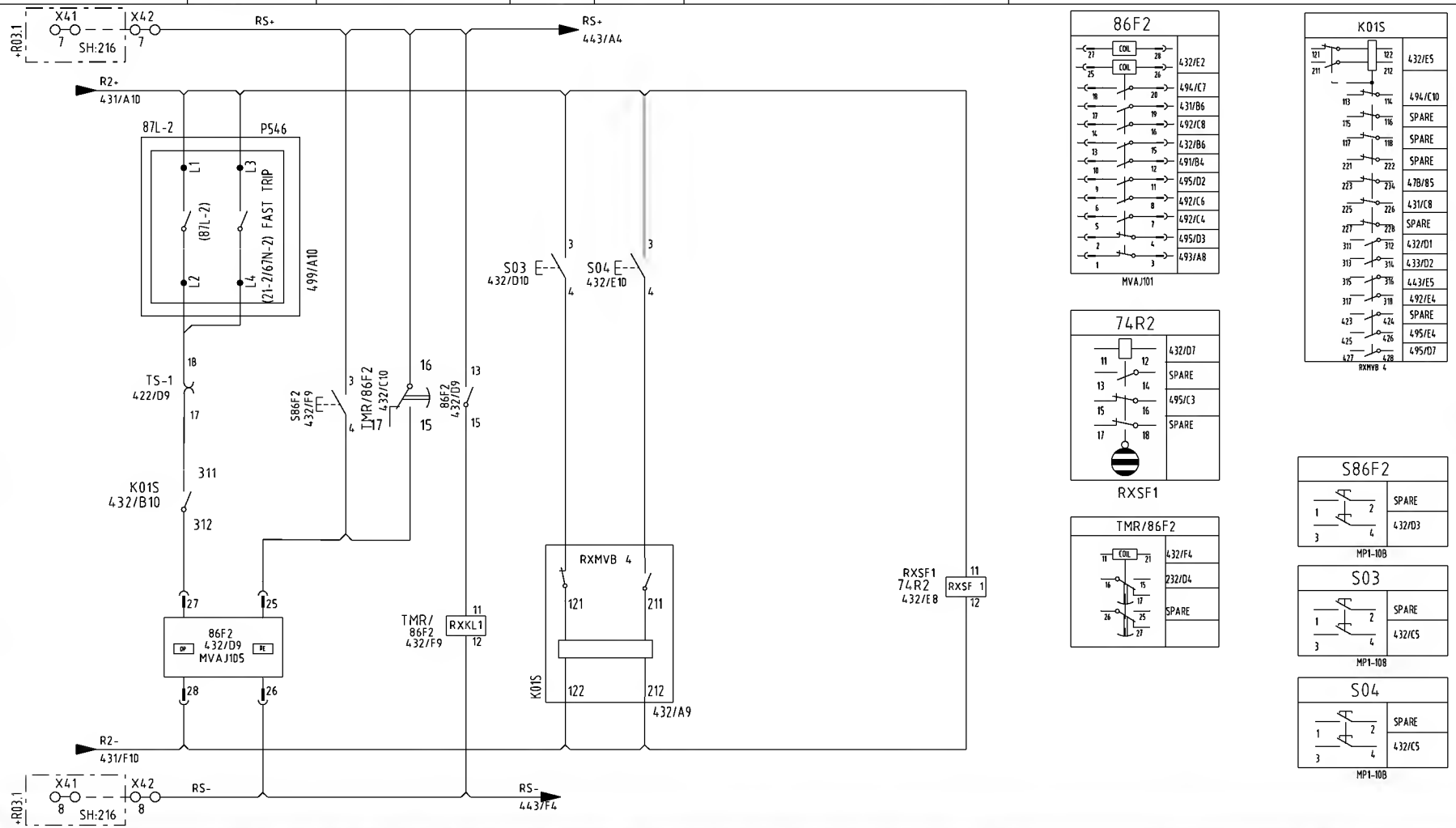

AS-BUILT BY _____ DATE _____	CONTRACT NO. 11131113/00	JOB ORDER NO. S-13656

REV. NO.	DATE	DESCRIPTION
00	13 04	FOR APPROVAL

DRAWN BY RIZ CHECKED BY KVR
DATE STARTED 24.01.2013 DATE COMPLETED _____
DPRG. DEPT. CTPD ENG. DEPT. AUT-PSAC

MAIN-2 DISTANCE. PROTECTTION TRIP RELAY CKT.
132kV UGF-8710 RELAY PANEL-2 +R03.2
S/S 8709-132/13.8KV IN AL-KHARJ CITY
RIYADH SAUDI ARABIA

الشركة الوطنية لنقل الكهرباء
نقل الكهرباء
National Grid SA

INDEX	PLANT NO.	DRAWING NUMBER	SHEET NO. SHT	SHEET NO. CONT.	REV. NO.
-	C421	CD-322919	432	433	00

NG/D2-0 (2012/01)
DMS VECTOR NGD200

THIS DRAWING AND THE INFORMATION CONTAINED HEREIN ARE THE SOLE PROPERTY OF National Grid SA NO REPRODUCTION IN FULL OR IN PART SHALL BE OBTAINED FROM THIS DOCUMENT WITHOUT THE WRITTEN CONSENT OF ITS OWNER.

IT-2 RECIEVED

87L-2 | IT2 DC SUPPLY SUPERVN.

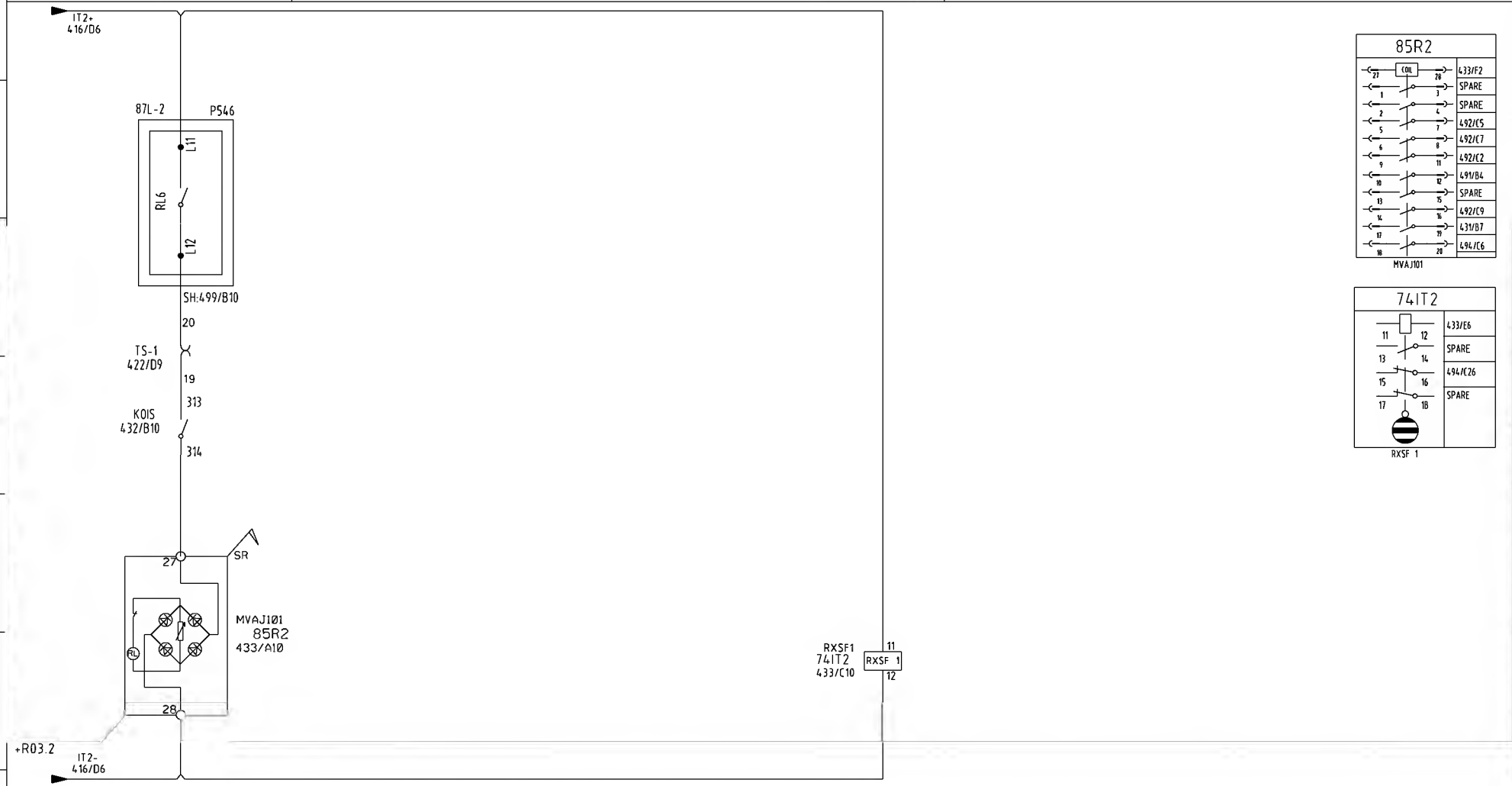

AS-BUILT BY _____ DATE _____	CONTRACT NO. 11131113/00	JOB ORDER NO. S-13656

REV. NO.	DATE	DESCRIPTION
00	13 04	FOR APPROVAL

DRAWN BY RIZ CHECKED BY KVR

DATE STARTED 24.01.2013 DATE COMPLETED _____

DPRG. DEPT. CTPD ENG. DEPT. AUT-PSAC

MAIN-2 DISTANCE. PROTECTTION TRIP RELAY CKT.

132kV UGF-8710 RELAY PANEL-2 +R03.2

S/S 8709-132/13.8KV IN AL-KHARJ CITY

RIYADH SAUDI ARABIA

الشركة الوطنية لنقل الكهرباء

نقل الكهرباء National Grid SA

INDEX	PLANT NO.	DRAWING NUMBER	SHEET NO. SHT	SHEET NO. CONT.	REV. NO.
-	C421	CD-322919	433	443	00

NG/D2-0 (2012/01)

DMS VECTOR NGD200

THIS DRAWING AND THE INFORMATION CONTAINED HEREIN ARE THE SOLE PROPERTY OF National Grid SA NO REPRODUCTION IN FULL OR IN PART SHALL BE OBTAINED FROM THIS DOCUMENT WITHOUT THE WRITTEN CONSENT OF ITS OWNER.

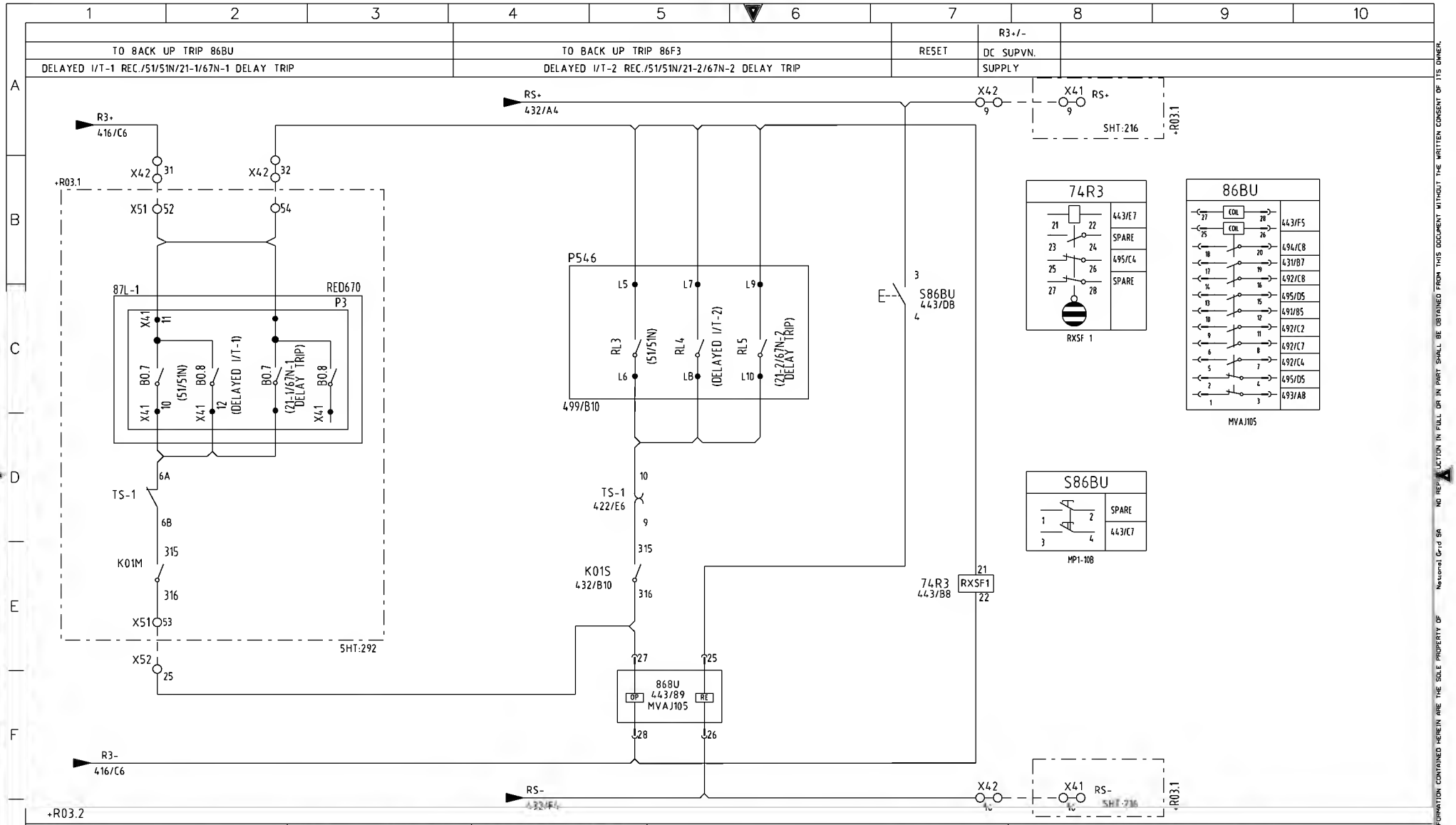

AS-BUILT BY	DATE	CONTRACT NO. 11131113/00	JOB ORDER NO. S-13656
REV. NO.	DATE	DESCRIPTION	
00	13 04	FOR APPROVAL	

DRAWN BY RIZ CHECKED BY KVR
DATE STARTED 24.01.2013 DATE COMPLETED
ORGG. DEPT. CTPD ENG. DEPT. AUT-PSAC

BACKUP PROTECTTION TRIP RELAY CIRCUIT
132kV UGF-8710 RELAY PANEL-2 +R03.2
S/S 8709-132/13.8KV IN AL-KHARJ CITY
RIYADH SAUDI ARABIA

الشركة الوطنية لنقل الكهرباء
نقل الكهرباء
National Grid SA

INDEX	PLANT NO.	DRAWING NUMBER	SHEET NO. SHT	SHEET NO. CONT.	REV. NO.
-	C421	CD-322919	443	446	00

NG/D2-0 (2012/01)
DMS VECTOR NGD200

THIS DRAWING AND THE INFORMATION CONTAINED HEREIN ARE THE SOLE PROPERTY OF National Grid SA NO REPRODUCTION IN FULL OR IN PART SHALL BE OBTAINED FROM THIS DOCUMENT WITHOUT THE WRITTEN CONSENT OF ITS OWNER.

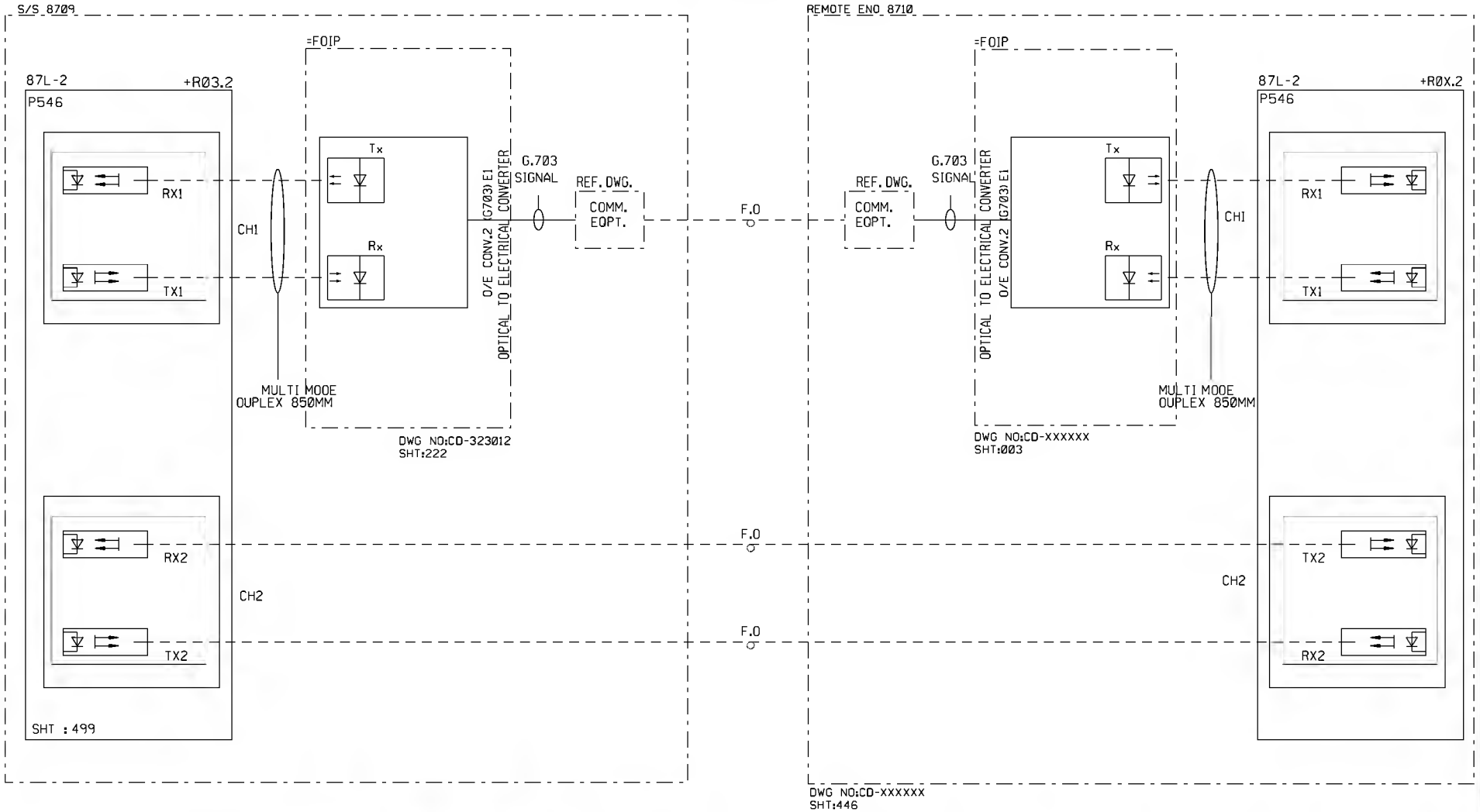

AS-BUILT BY _____ DATE _____	CONTRACT NO. 11131113/00	JOB ORDER NO. S-13656
	DRAWN BY RIZ	CHECKED BY KVR
00 / 13 04 / FOR APPROVAL	DATE STARTED 24.01.2013	DATE COMPLETED _____
REV. NO. / DATE / DESCRIPTION	OPRG. DEPT. CTPD	ENG. DEPT. AUT-PSAC

COMMUNICATION INTERFACE
132kV UGF-8710 RELAY PANEL-2 +R03.2
S/S 8709-132/13.8KV IN AL-KHARJ CITY
RIYADH SAUDI ARABIA

الشركة الوطنية لنقل الكهرباء
National Grid SA

INDEX	PLANT NO.	DRAWING NUMBER	SHEET NO. SHT	SHEET NO. CONT.	REV. NO.
-	C421	CD-322919	446	478	00

NG/D2-D (2012/01)
DMS VECTOR NGD200

THIS DRAWING AND THE INFORMATION CONTAINED HEREIN ARE THE SOLE PROPERTY OF National Grid SA NO REPRODUCTION IN FULL OR IN PART SHALL BE OBTAINED FROM THIS DOCUMENT WITHOUT THE WRITTEN CONSENT OF ITS OWNER.

LAMP TEST	FPSM OUT

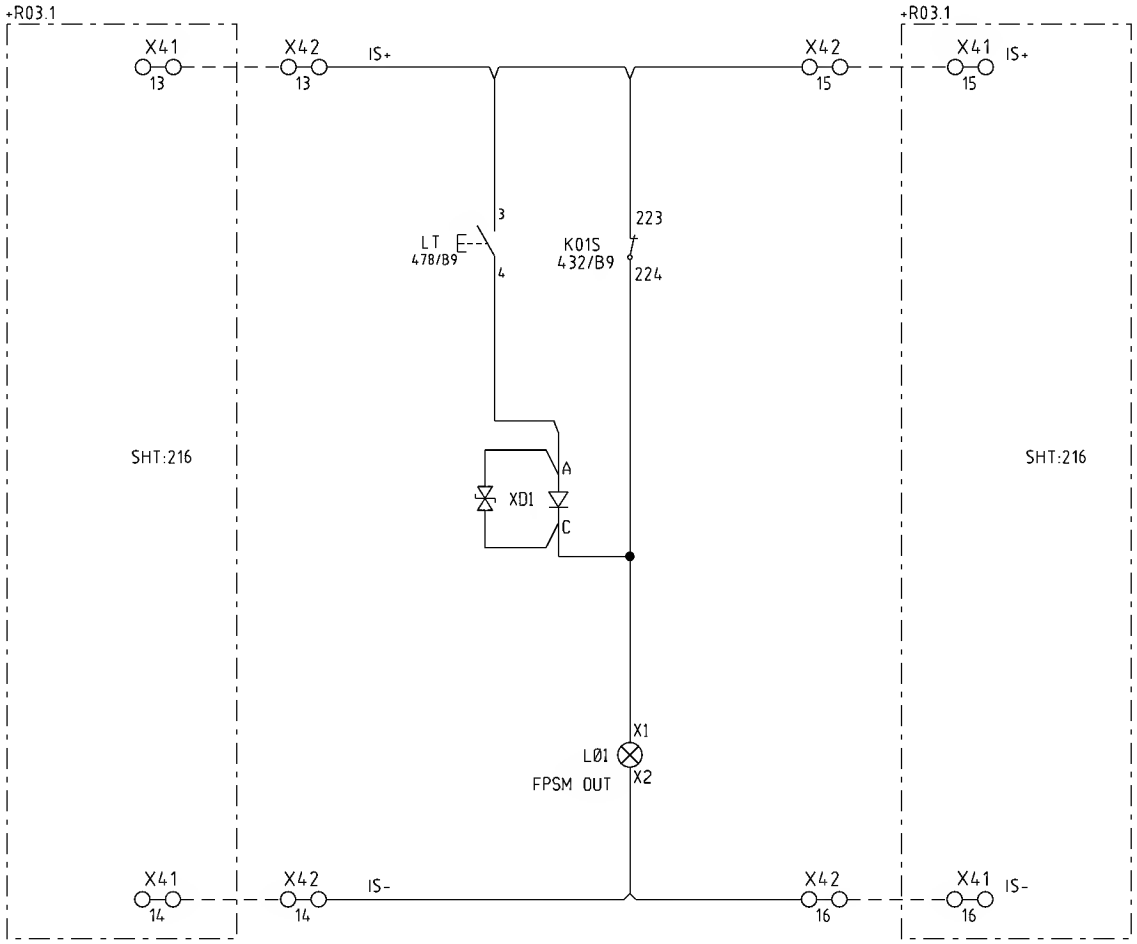

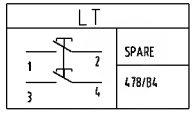

AS-BUILT BY _____ DATE _____	CONTRACT NO. 11131113/00	JOB ORDER NO. S-13656
REV. NO.	DATE	DESCRIPTION
00	13 04	FOR APPROVAL

DRAWN BY RIZ CHECKED BY KVR
DATE STARTED 24.01.2013 DATE COMPLETED _____
DPRG. DEPT. CTPD ENG. DEPT. AUT-PSAC

MAIN-2 INDICATION CIRCUIT
132kV UGF-8710 RELAY PANEL-2 +R03.2
S/S 8709-132/13.8KV IN AL-KHARJ CITY
RIYADH SAUDI ARABIA

الشركة الوطنية لنقل الكهرباء
نقل الكهرباء
National Grid SA

INDEX	PLANT NO.	DRAWING NUMBER	SHEET NO. SHT	SHEET NO. CONT.	REV. NO.
-	C421	CD-322919	478	491	00

NG/D2-D (2012/01)
DMS VECTOR NGD200

THIS DRAWING AND THE INFORMATION CONTAINED HEREIN ARE THE SOLE PROPERTY OF National Grid SA NO REPRODUCTION IN FULL OR IN PART SHALL BE OBTAINED FROM THIS DOCUMENT WITHOUT THE WRITTEN CONSENT OF ITS OWNER.

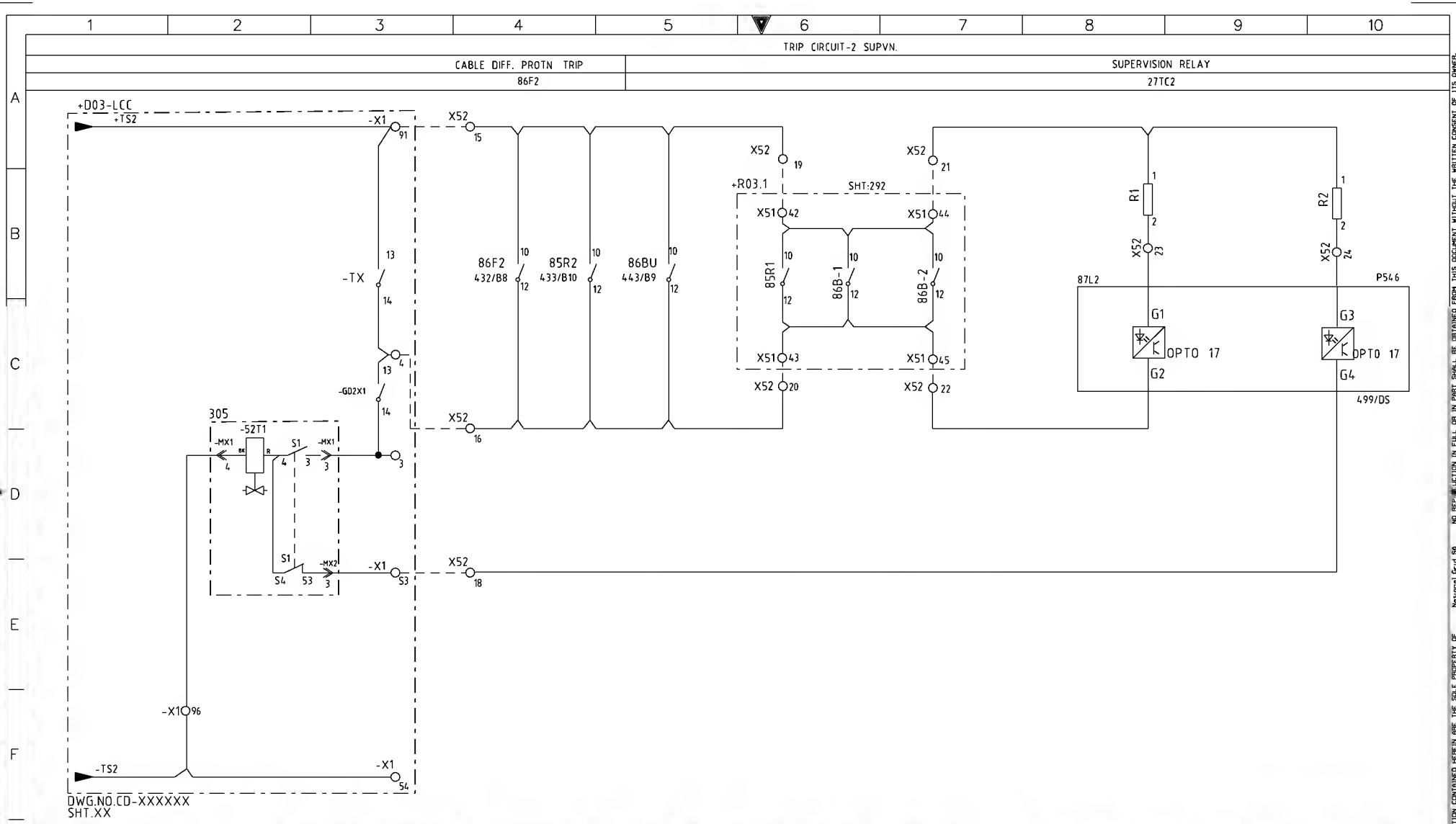

AS-BUILT BY	DATE	CONTRACT NO. 11131113/00	JOB ORDER NO. S-13656
		DRAWN BY RIZ	CHECKED BY KVR
00	13 04	FOR APPROVAL	DATE STARTED 24.01.2013 DATE COMPLETED
REV. NO.	DATE	DESCRIPTION	OPRG. DEPT. CTPD ENG. DEPT. AUT-PSAC

TRIP COIL-2 SUPERVSION CIRCUIT

132kV UGF-8710 RELAY PANEL-2 +R03.2

S/S 8709-132/13.8KV IN AL-KHARJ CITY

RIYADH SAUDI ARABIA

الشركة الوطنية لنقل الكهرباء

نقل الكهرباء National Grid SA

INDEX	PLANT NO.	DRAWING NUMBER	SHEET NO. SHT	SHEET NO. CONT.	REV. NO.
-	C421	CD-322919	491	492	00

NG/D2-0 (2012/01)

DMS VECTOR NGD200

THIS DRAWING AND THE INFORMATION CONTAINED HEREIN ARE THE SOLE PROPERTY OF National Grid SA NO REPRODUCTION IN FULL OR IN PART SHALL BE OBTAINED FROM THIS DOCUMENT WITHOUT THE WRITTEN CONSENT OF ITS OWNER.

MAIN-2 DIFF/DIST. LOR CONTACTS

TC-1 TRIPPING			CBF-1 INITIATION			CBF-2 INITIATION			DDTR			IT-2 RECEIVE
B/U PROT. TRIP	B6BU	85R2	B/U PROT. TRIP	B6BU	85R2	B/U PROT. TRIP	B6BU	85R2	B/U PROT. TRIP	B6BU	85R2	TO B5R1

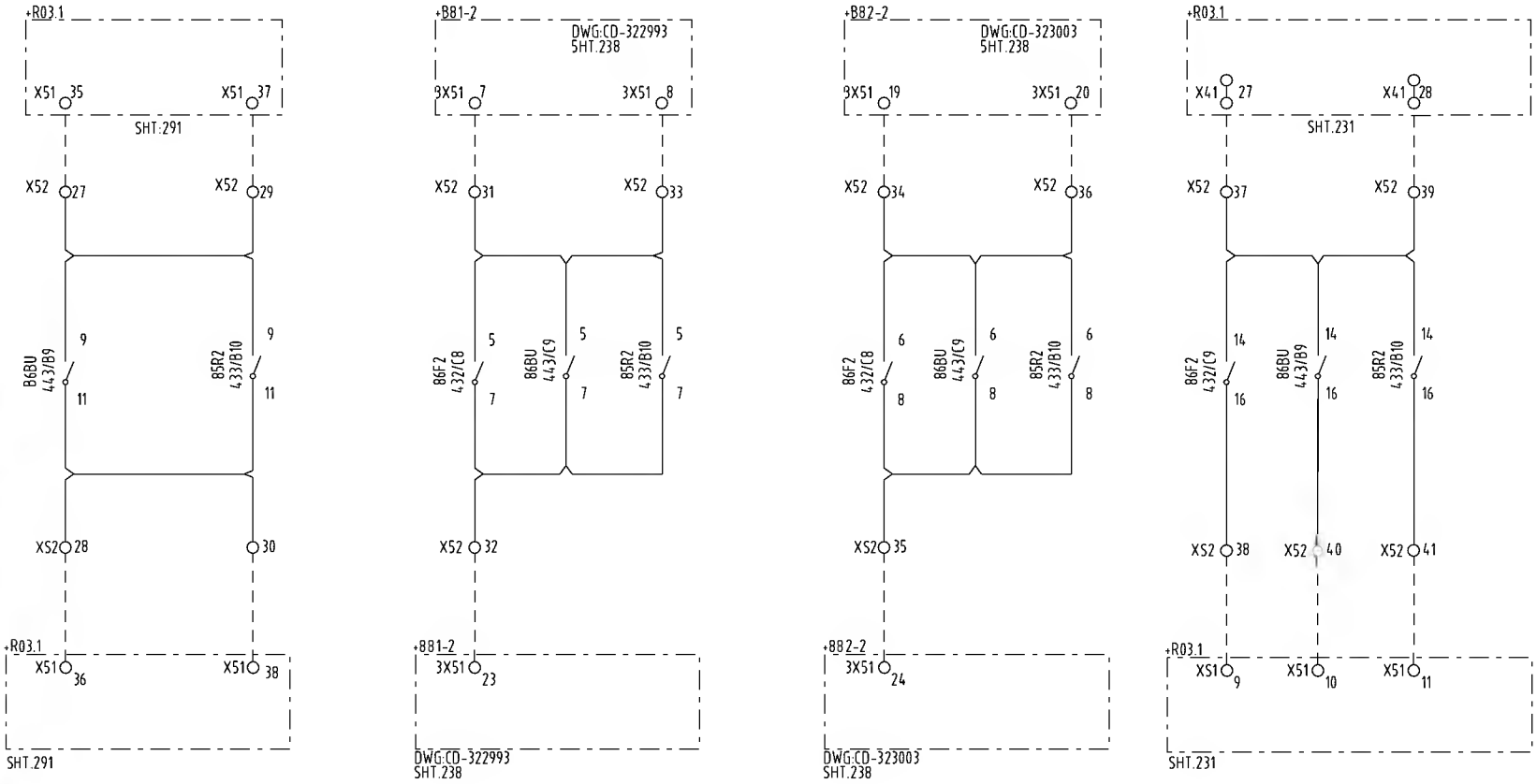

AS-BUILT BY _____ DATE _____	CONTRACT NO. 11131113/00	JOB ORDER NO. S-13656
	DRAWN BY RIZ	CHECKED BY KVR
	DATE STARTED 24.01.2013	DATE COMPLETED _____
	OPRG. DEPT. CTPD	ENG. DEPT. AUT-PSAC

REV. NO.	DATE	DESCRIPTION
00	13 04	FOR APPROVAL

TRIP COIL-1 & CBF INITIATION CONTACTS
132kV UGF-8710 RELAY PANEL-2 +R03.2
S/S 8709-132/13.8KV IN AL-KHARJ CITY
RIYADH SAUDI ARABIA

الشركة الوطنية لنقل الكهرباء
نقل الكهرباء
National Grid SA

INDEX	PLANT NO.	DRAWING NUMBER	SHEET NO. SHT	SHEET NO. CONT.	REV. NO.
-	C421	CD-322919	492	493	00

NG/D2-0 (2012/01)
DMS VECTOR NGD200

THIS DRAWING AND THE INFORMATION CONTAINED HEREIN ARE THE SOLE PROPERTY OF National Grid SA NO REPRODUCTION IN FULL OR IN PART SHALL BE OBTAINED FROM THIS DOCUMENT WITHOUT THE WRITTEN CONSENT OF ITS OWNER.

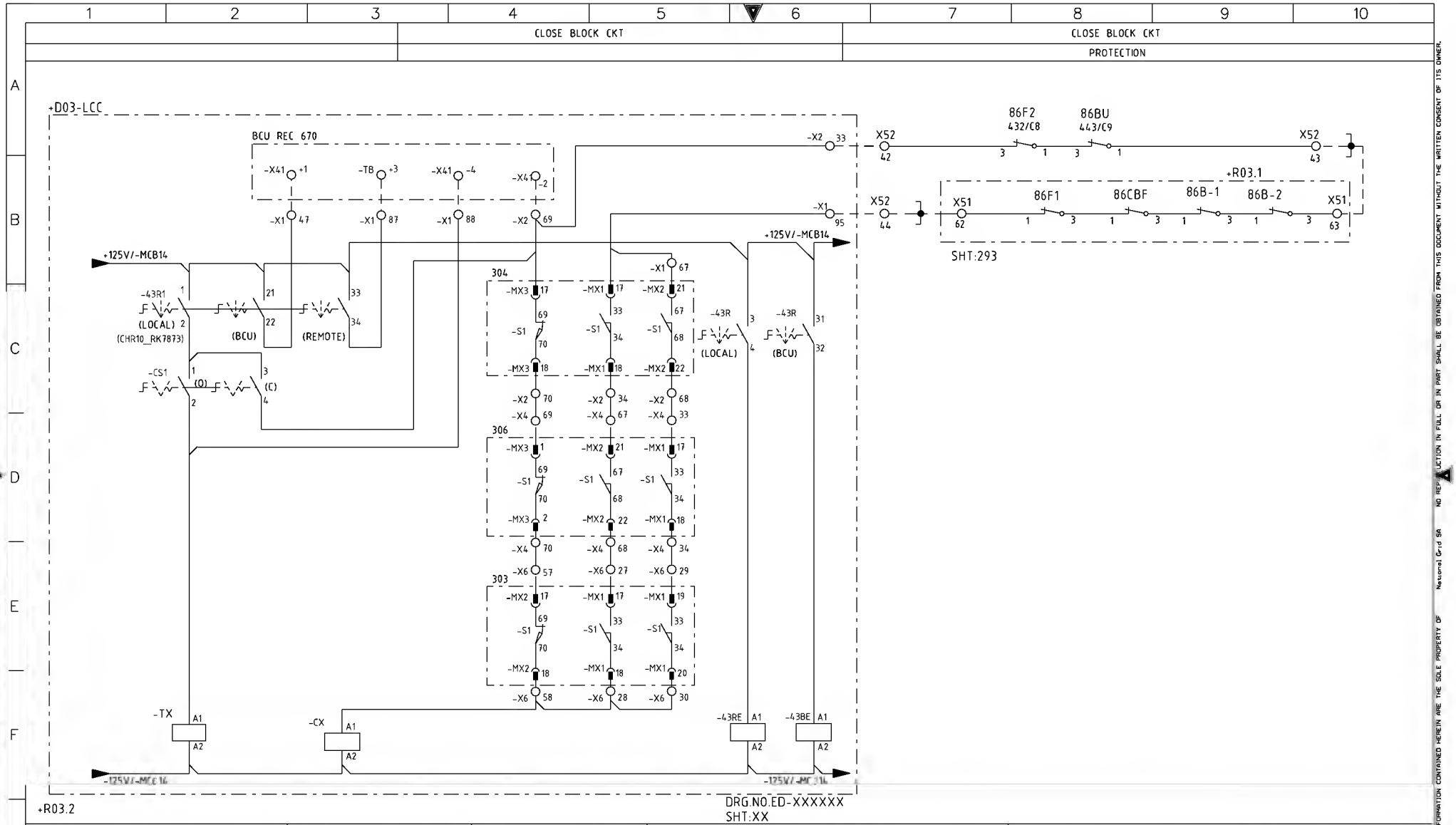

AS-BUILT BY _____ DATE _____	CONTRACT NO. 11131113/00	JOB ORDER NO. S-13656
	DRAWN BY RIZ	CHECKED BY KVR
	DATE STARTED 24.01.2013	DATE COMPLETED _____
	ORG. DEPT. CTPD	ENG. DEPT. AUT-PSAC

REV. NO.	DATE	DESCRIPTION
00	13 04	FOR APPROVAL

CLOSING CIRCUIT

132kV UGF-8710 RELAY PANEL-2 +R03.2

S/S 8709-132/13.8KV IN AL-KHARJ CITY

RIYADH SAUDI ARABIA

الشركة الوطنية لنقل الكهرباء

نقل الكهرباء National Grid SA

INDEX	PLANT NO.	DRAWING NUMBER	SHEET NO. SHT	SHEET NO. CONT.	REV. NO.
-	C421	CD-322919	493	494	00

NG/D2-0 (2012/01)

DMS VECTOR NGD200

THIS DRAWING AND THE INFORMATION CONTAINED HEREIN ARE THE SOLE PROPERTY OF National Grid SA NO REPRODUCTION IN FULL OR IN PART SHALL BE OBTAINED FROM THIS DOCUMENT WITHOUT THE WRITTEN CONSENT OF ITS OWNER.

	FPSM								
	87L-2	R2	R3	IT2 DC	85R2	86F2	86BU	FPSM
	FAULTY	FAIL	FAIL	FAIL	OPTD	OPTD	OPTD	OUT

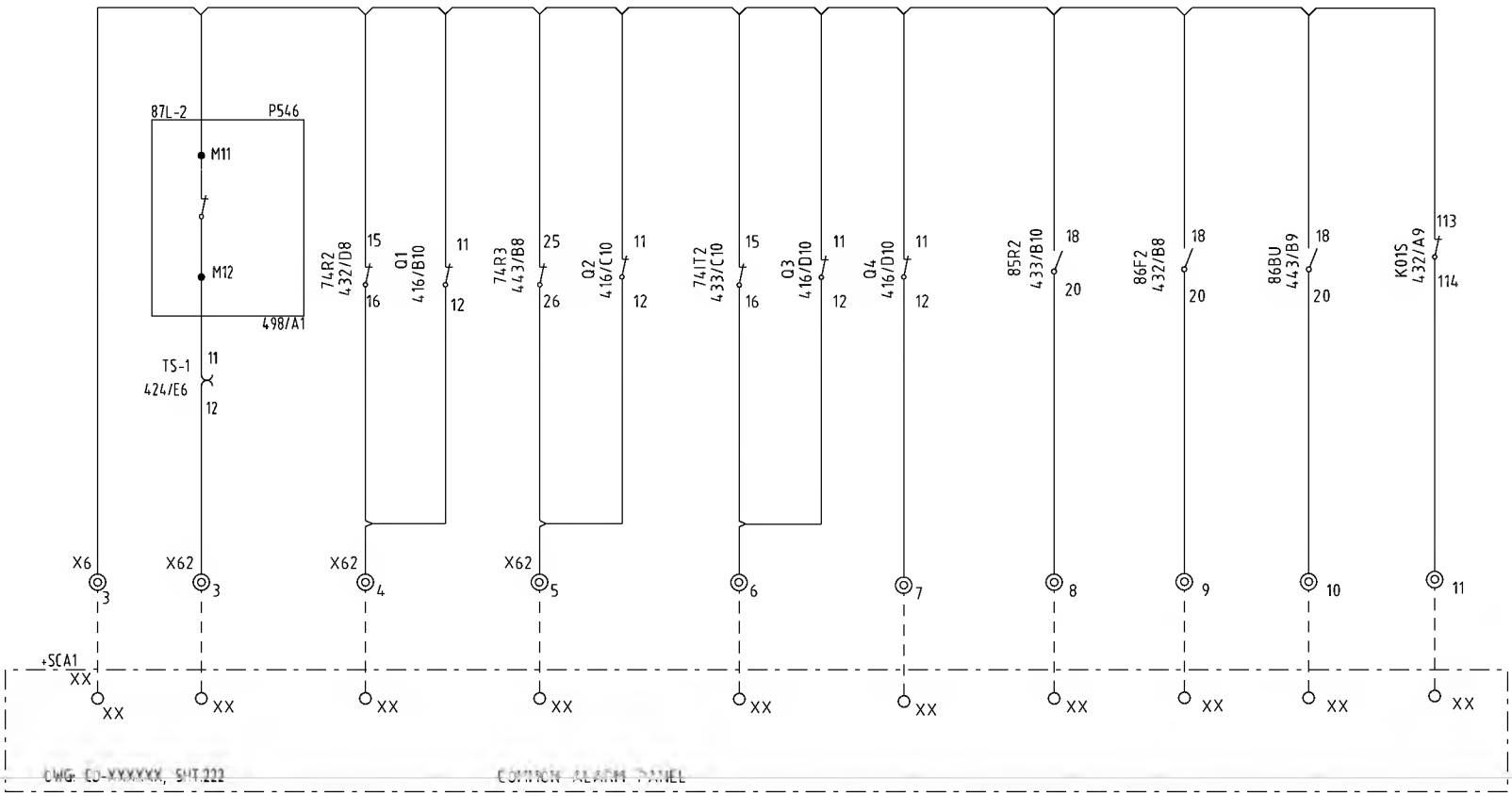

AS-BUILT BY _____ DATE _____	CONTRACT NO. 11131113/00	JOB ORDER NO. S-13656	COMMON ALARM CIRCITS	
	DRAWN BY RIZ	CHECKED BY KVR	132kV UGF-8710 RELAY PANEL-2 +R03.2	
00 / 13 04 / FOR APPROVAL	DATE STARTED 24.01.2013	DATE COMPLETED _____	S/S 8709-132/13.8KV IN AL-KHARJ CITY	
REV. NO. / DATE / DESCRIPTION	ORG. DEPT. CTPD	ENG. DEPT. AUT-PSAC	RIYADH SAUDI ARABIA	

الشركة الوطنية لنقل الكهرباء
نقل الكهرباء
National Grid SA

INDEX	PLANT NO.	DRAWING NUMBER	SHEET NO. SHT	SHEET NO. CONT.	REV. NO.
-	C421	CD-322919	494	495	00

NG/D2-0 (2012/01)

DMS | VECTOR | NGD200

THIS DRAWING AND THE INFORMATION CONTAINED HEREIN ARE THE SOLE PROPERTY OF National Grid SA NO REPRODUCTION IN FULL OR IN PART SHALL BE OBTAINED FROM THIS DOCUMENT WITHOUT THE WRITTEN CONSENT OF ITS OWNER.

SPARE

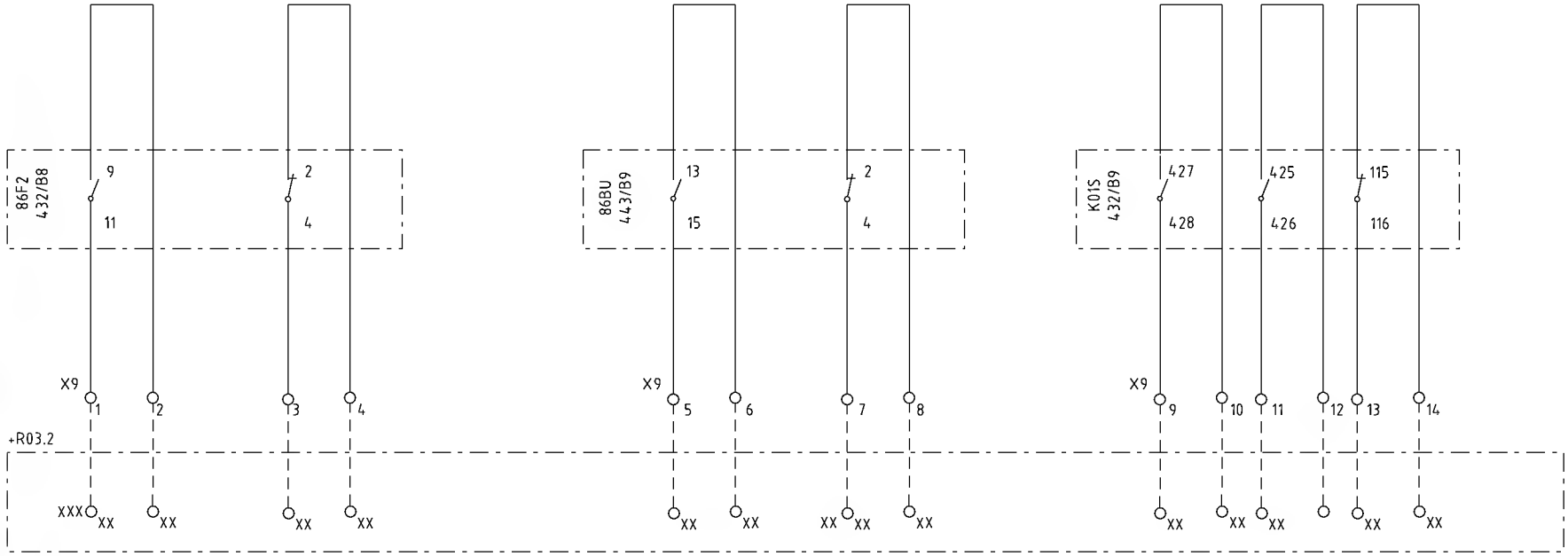

+R03.2

AS-BUILT BY _____ DATE _____	CONTRACT NO. 11131113/00	JOB ORDER NO. S-13656
REV. NO.	DATE	DESCRIPTION
00	13 04	FOR APPROVAL

DRAWN BY RIZ CHECKED BY KVR
DATE STARTED 24.01.2013 DATE COMPLETED _____
DPRG. DEPT. CTPD ENG. DEPT. AUT-PSAC

SPARE CONTACTS
132kV UGF-8710 RELAY PANEL-2 +R03.2
S/S 8709-132/13.8KV IN AL-KHARJ CITY
RIYADH SAUDI ARABIA

الشركة الوطنية لنقل الكهرباء
نقل الكهرباء
National Grid SA

INDEX	PLANT NO.	DRAWING NUMBER	SHEET NO. SHT	SHEET NO. CONT.	REV. NO.
-	C421	CD-322919	495	498	00

NG/D2-0 (2012/01)
DMS VECTOR NGD200

THIS DRAWING AND THE INFORMATION CONTAINED HEREIN ARE THE SOLE PROPERTY OF National Grid SA NO REPRODUCTION IN FULL OR IN PART SHALL BE OBTAINED FROM THIS DOCUMENT WITHOUT THE WRITTEN CONSENT OF ITS OWNER.

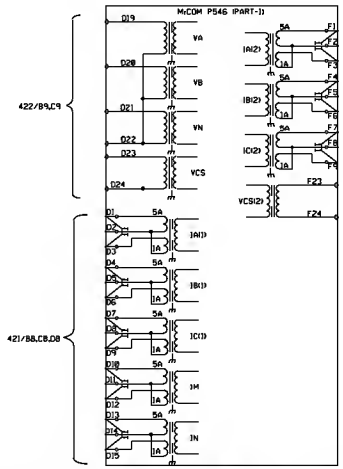

NOTES:

1(A) C.T SHORTING LINKS

1(B) PIN TERMINAL (P.C.B TYPE)

2. USED FOR SELF PROTECTION I_N SENSITIVE SHOULD BE DRIVEN FROM A CORE BALANCE CT WHEN SENSITIVE SETTINGS ARE USED

3. I_M INPUT IS FOR OPTIONAL MUTUAL COMPENSATION

AS-BUILT BY ____ DATE ____	CONTRACT NO. 1113013/00	JOB ORDER NO. S-13656	BLOCK REFERENCE
	DRAWN BY RIZ	CHECKED BY KVR	132kV UGF-8710 RELAY PANEL-2 +R03.2
	DATE STARTED 24.01.2013	DATE COMPLETED	S/S 8709-132/13.8KV IN AL-KHARJ CITY
00 13 04 FOR APPROVAL	SPVR. DEPT. CIPD	ENG. DEPT. AUT-PSAC	RIYADH SAUDI ARABIA
REV. DATE DESCRIPTION			

الشركة الوطنية لنقل الكهرباء
National Grid SA

INDEX	PLANT NO.	DRAWING NUMBER	SHEET NO. SHT	SHEET NO. CONT	REV. NO.
-	C421	CD-322919	498	499	00

NG/QF-0 (2012/03)

DWG VECTOR NG0200

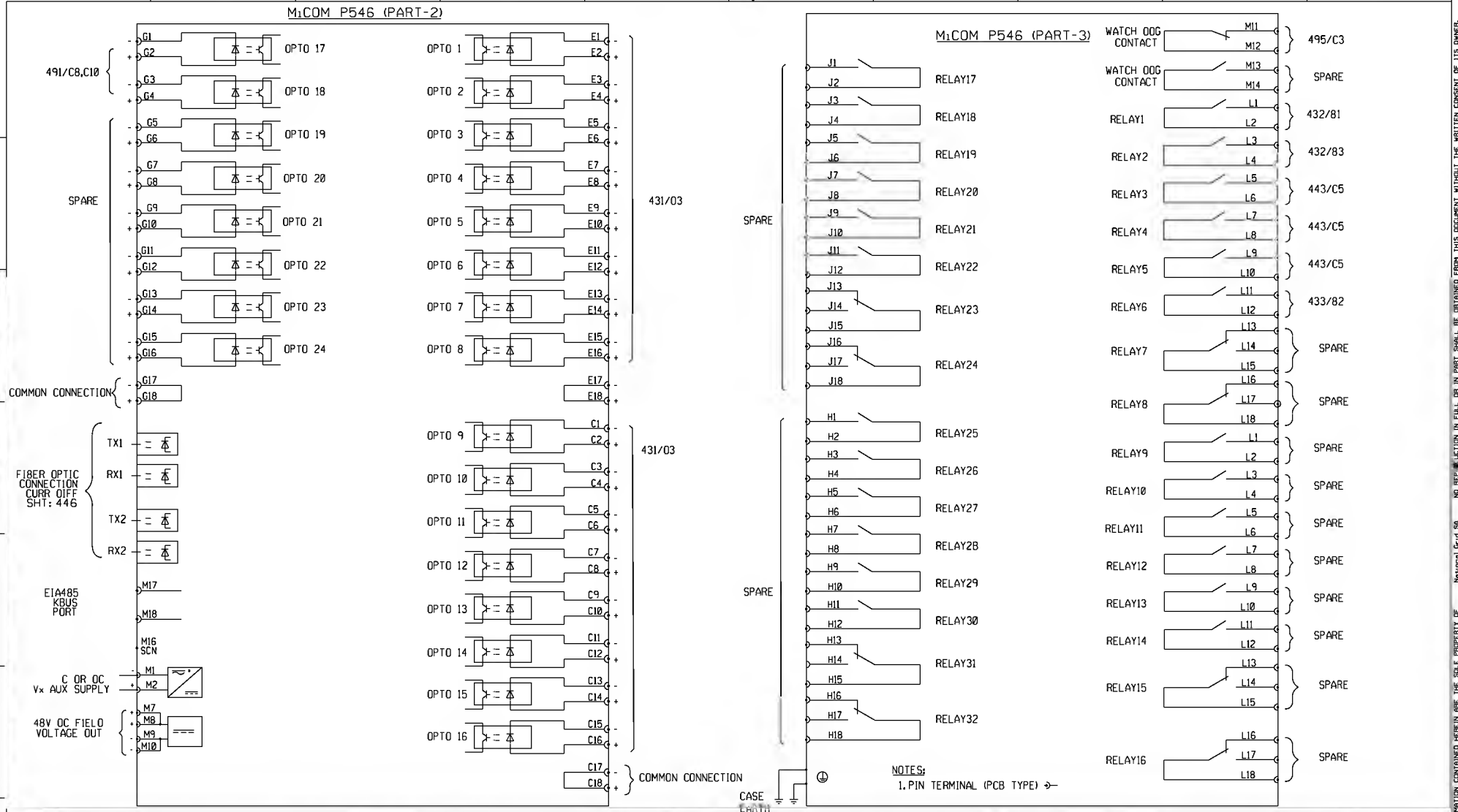

AS-BUILT BY _____ DATE _____	CONTRACT NO. 11131113/00	JOB ORDER NO. S-13656
	DRAWN BY RIZ	CHECKED BY KVR
00 / 13 04 / FOR APPROVAL	DATE STARTED 24.01.2013	DATE COMPLETED
REV. NO. / DATE / DESCRIPTION	OPRG. DEPT. CTPD	ENG. DEPT. AUT-PSAC

CLOSING CIRCUIT

132kV UGF-8710 RELAY PANEL-2 +R03.2

S/S 8709-132/13.8KV IN AL-KHARJ CITY

RIYADH SAUDI ARABIA

الشركة الوطنية لنقل الكهرباء

نقل الكهرباء National Grid SA

INDEX	PLANT NO.	DRAWING NUMBER	SHEET NO. SHT	SHEET NO. CONT.	REV. NO.
-	C421	CD-322919	499	501	00

NG/D2-0 (2012/01)

DMS VECTOR NGD200

THIS DRAWING AND THE INFORMATION CONTAINED HEREIN ARE THE SOLE PROPERTY OF National Grid SA NO REPRODUCTION IN FULL OR IN PART SHALL BE OBTAINED FROM THIS DOCUMENT WITHOUT THE WRITTEN CONSENT OF ITS OWNER.

REFERENCE	X1 CT CKT.
421/C5	1
421/C5	2
421/C5	3
421/C5	4
421/D5	5
421/D5	6
421/D5	7
421/D5	B
421/E5	9
SPARE	10

REFERENCE	XTJ T.JACK
411/C3	1
411/C3	2
411/D3	3
411/D3	4
SPARE	5

REFERENCE	XSH SPACE HEATER
411/E6	1
411/F6	2
SPARE	3

REFERENCE	X6 ALM. CKT.
412/C5	1
412/C5	2
495/E2	3

REFERENCE	X2 VT CKT.
422/B6	1
422/B6	2
422/C6	3
422/C6	4
SPARE	5

REFERENCE	X3 AC CKT.
411/A3	1
411/B3	2
411/A3	3
411/C3	4
411/B3	5
411/C3	6
411/B3	7
411/C3	B
SPARE	9
SPARE	10

REFERENCE	X62 ALM. CKT.
412/E5	1
412/E5	2
494/E3	3
494/E4	4
494/E5	5
494/E6	6
494/E7	7
494/EB	B
SPARE	9
SPARE	10
SPARE	11
SPARE	12
SPARE	13
SPARE	14
SPARE	15

REFERENCE	X42 DC CKTS.
416/B3	1
416/B3	2
416/B3	3
416/C3	4
416/C3	5
416/C3	6
432/A2	7
432/F2	B
443/A4	9
443/F4	10
SPARE	11
SPARE	12
478/B3	13
478/E3	14
47B/BB	15
47B/EB	16
416/E3	17
416/E3	1B
SPARE	19
SPARE	20
431/B3	21
431/B4	22
431/B4	23
431/B5	24
431/B5	25
431/B6	26
431/B8	27
431/B9	2B
SPARE	29
SPARE	30
443/A2	31

REFERENCE	XS2 CONTROL & PROTN CKTS.
416/F7	1
416/F7	2
431/D4	3
431/D4	4
431/D5	5
431/D6	6
431/D6	7
431/D7	8
431/DB	9
431/D8	10
432/C4	11
432/C4	12
443/F2	13
SPARE	14
491/A4	15
491/C4	16
491/E4	17
491/A6	18
491/C6	19
491/A7	20
491/C7	21
491/AB	22
491/B8	23
491/A10	24
443/B10	25
SPARE	26
492/B2	27
492/D2	28
492/B3	29
492/D3	30
492/B4	31
492/D4	32
492/B5	33
492/B6	34
492/D6	35
492/B7	36
492/BB	37
492/D8	38
492/B9	39
492/D9	40
492/A7	41
492/A10	42
492/B7	43
SPARE	44
SPARE	45
SPARE	46
SPARE	47
SPARE	48
SPARE	49
SPARE	50

REFERENCE	X9 SPARE
495/E1	1
495/E2	2
495/E3	3
495/E3	4
495/E5	5
495/E5	6
495/E6	7
495/E6	B
495/E7	9
495/EB	10
495/EB	11
495/EB	12
495/E9	13
495/E9	14
SPARE	15
SPARE	16
SPARE	17
SPARE	18
SPARE	19
SPARE	20
SPARE	21
SPARE	22
SPARE	23
SPARE	24
SPARE	25

AS-BUILT BY _____ DATE _____

REV. NO.	DATE	DESCRIPTION
00	13 04	FOR APPROVAL

CONTRACT NO. 11131113/00

JOB ORDER NO. S-13656

DRAWN BY RIZ CHECKED BY KVR

DATE STARTED 24.01.2013 DATE COMPLETED _____

ORGN. DEPT. CTPD ENG. DEPT. AUT-PSAC

TERMINAL BLOCKS PANEL +R01.2

132kV UGF-8710 RELAY PANEL-2 +R03.2

S/S 8709-132/13.8KV IN AL-KHARJ CITY

RIYADH SAUDI ARABIA

الشركة الوطنية لنقل الكهرباء

نقل الكهرباء National Grid SA

INDEX	PLANT NO.	DRAWING NUMBER	SHEET NO. SHT	SHEET NO. CONT.	REV. NO.
-	C421	CD-322919	501	NIL	00

NG/D2-0 (2012/01)

DMS VECTOR NGD200

THIS DRAWING AND THE INFORMATION CONTAINED HEREIN ARE THE SOLE PROPERTY OF National Grid SA NO REPRODUCTION IN FULL OR IN PART SHALL BE OBTAINED FROM THIS DOCUMENT WITHOUT THE WRITTEN CONSENT OF ITS OWNER.

POWER SYSTEMS NETWORK MANAGEMENT
PROTECTION AND SUBSTATION AUTOMATION SYSTEMS
WBS NO: S-13656

ABB AUTOMATION COMPANY LTD.,
414, AL-KHARJ ROAD
SECOND INDUSTRIAL CITY
RIYADH-11383 K.S.A

CONTRACTOR : ABB Contracting Company

CLIENT : National Grid SA

PROJECT : CONSTRUCTION OF NEW 132/13.8kV SS 8709 IN AL-KHARJ CITY

SUBSTATION : S/S 8709

CONTRACT NO. : 11131113/00

TITLE : Assembly Drawing - +R05.1 [GT-1]

REV. NO.	DATE	DESCRIPTION
00	13 04	FOR APPROVAL

AS-BUILT BY _____ DATE _____ | CONTRACT NO. 11131113/00 | JOB ORDER NO. S-13656

DRAWN BY RIZ CHECKED BY JKR
DATE STARTED 24.01.2013 DATE COMPLETED _____
OPRG. DEPT. CTPD ENG. DEPT. AUT-PSAC

COVER SHEET
132/13.8kV GT-1 RELAY PANEL-1 +R05.1
S/S 8709-132/13.8KV IN AL-KHARJ CITY
RIYADH SAUDI ARABIA

الشركة الوطنية لنقل الكهرباء
نقل الكهرباء
National Grid SA

INDEX	PLANT NO.	DRAWING NUMBER	SHEET NO. SHT	SHEET NO. CONT.	REV. NO.
-	C421	CD-322926	G00	G01	00

NG/D2-0 (2012/01)
DMS VECTOR NGD200

THIS DRAWING AND THE INFORMATION CONTAINED HEREIN ARE THE SOLE PROPERTY OF National Grid SA NO REPRODUCTION IN FULL OR IN PART SHALL BE OBTAINED FROM THIS DOCUMENT WITHOUT THE WRITTEN CONSENT OF ITS OWNER.

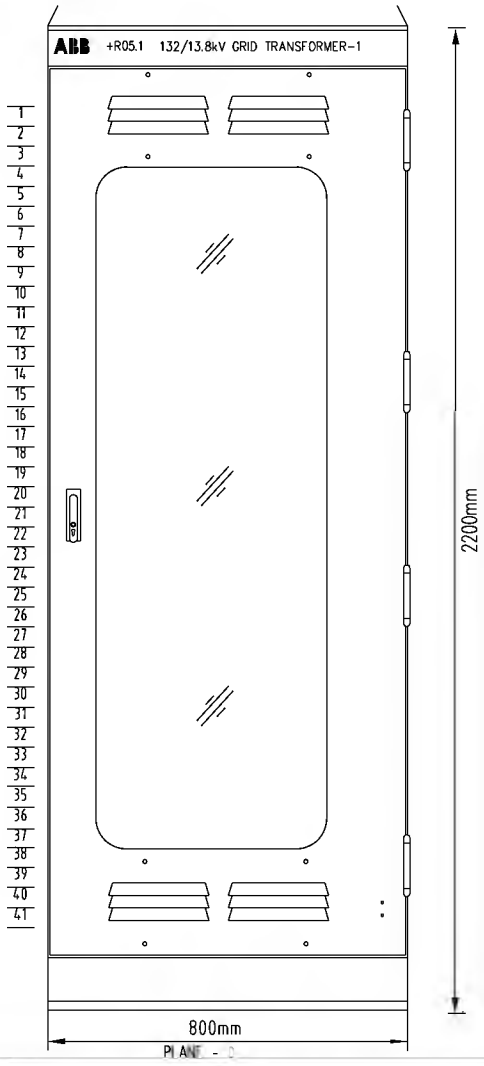

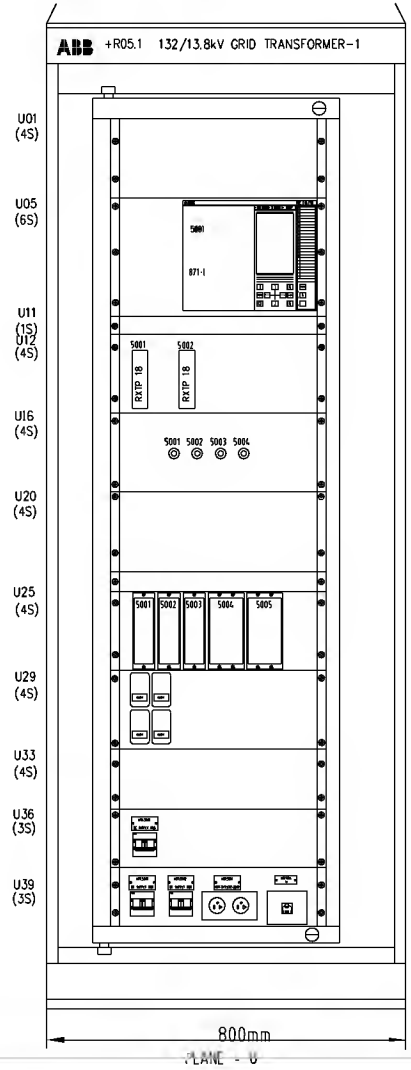

MOUNTING PLANES	
EXTERIOR COLOUR	AIRCRAFT GREY COLOUR TO SHADE NO. RAL7038
INTERIOR COLOUR	SIGNAL WHITE COLOUR TO SHADE NO. RAL9003
CUBICLE TYPE	VSH 200
FRAME	HINGED FRAME, MOVABLE
CUBICLE TYPE	FRONT ACCESS
MATERIAL OF CONSTRUCTION	ALUZINK STEEL
DIMENSIONS	2200 X 800 X 800 mm (H X W X D)
CLASS OF PROTECTION	IP 41
APPROX WEIGHT	200KG
CABLE ENTRY	BOTTOM

AS-BUILT BY _____ DATE _____

REV. NO.	DATE	DESCRIPTION
00	13 04	FOR APPROVAL

CONTRACT NO. 11131113/00

JOB ORDER NO. S-13656

DRAWN BY RIZ CHECKED BY JKR

DATE STARTED 24.01.2013 DATE COMPLETED _____

DPRG. DEPT. CTPD ENG. DEPT. AUT-PSAC

ASSEMBLY DRAWING

132/13.8kV GT-1 RELAY PANEL-1 +R05.1

S/S 8709-132/13.8KV IN AL-KHARJ CITY

RIYADH SAUDI ARABIA

الشركة الوطنية لنقل الكهرباء

نقل الكهرباء
National Grid SA

INDEX	PLANT NO.	DRAWING NUMBER	SHEET NO. SHT	SHEET NO. CONT.	REV. NO.
-	C421	CD-322926	G01	G02	00

NG/D2-0 (2012/01)

DMS VECTOR NGD200

THIS DRAWING AND THE INFORMATION CONTAINED HEREIN ARE THE SOLE PROPERTY OF National Grid SA NO REPRODUCTION IN FULL OR IN PART SHALL BE OBTAINED FROM THIS DOCUMENT WITHOUT THE WRITTEN CONSENT OF ITS OWNER.

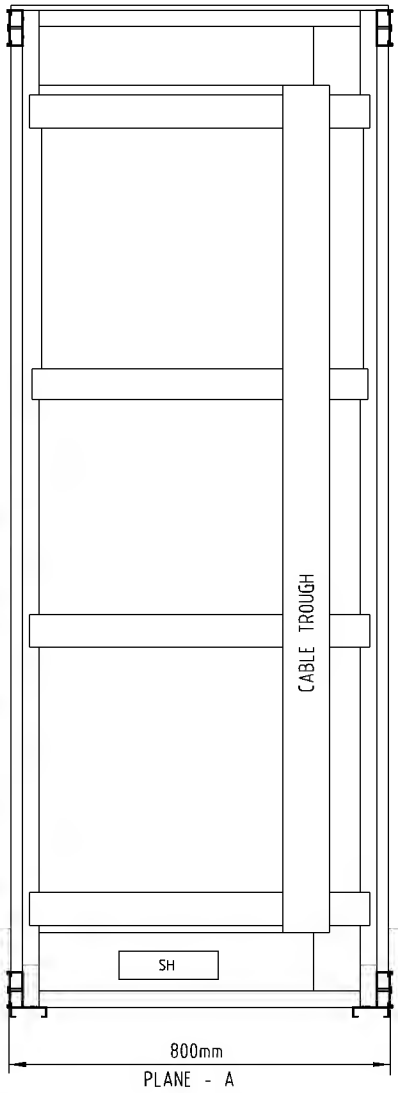

PLANE - A

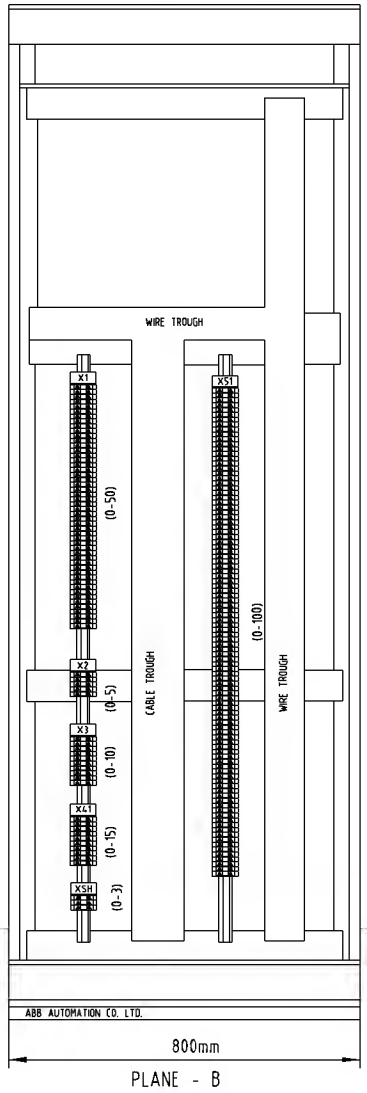

PLANE - B

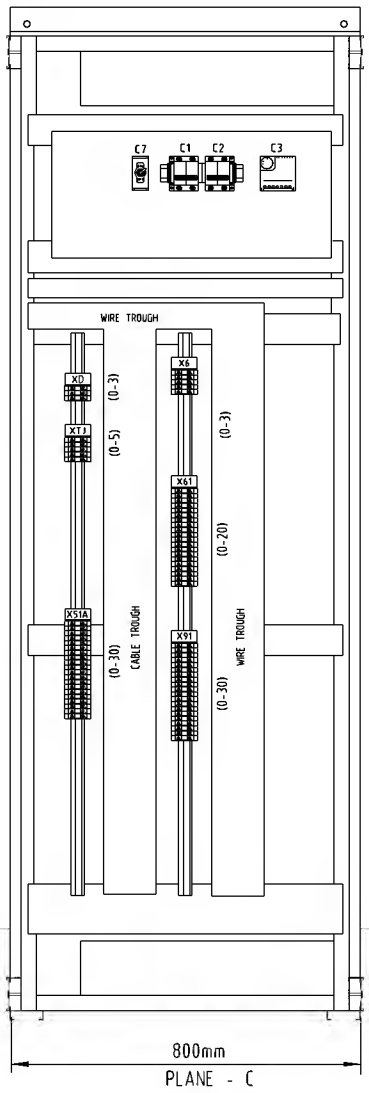

PLANE - C

PLANE - B

SCH.REF	DESCRIPTION	TYPE	MAKE
X1	CT CIRCUITS	OTTA 6T P/P	PHOENIX
X2	VT CIRCUITS	D6/8.ST1.RS	ENTRELEC
X3	AC INCOMING CIRCUITS	D6/8.ST1.RS	ENTRELEC
X41	DC EXT. CIRCUITS	M6/8.RS	ENTRELEC
X51,X51A	DC PROTN. CIRCUITS	M6/8.RS	ENTRELEC
XSH	SPACE HEATER	M6/8.RS	ENTRELEC

PLANE - C

SCH.REF	DESCRIPTION	TYPE	MAKE
XTJ	TELEPHONE JACK	M6/8.RS	ENTRELEC
X6	ALARM SUPPLY	M6/8.RS	ENTRELEC
X61	ALARM CIRCUITS	M6/8.RS	ENTRELEC
X91	SPARE CIRCUITS	M6/8.RS	ENTRELEC
XD	DC INCOMING CIRCUITS	IN540B	MEJDAF

AS-BUILT BY _____ DATE _____

REV. NO.	DATE	DESCRIPTION
00	13 04	FOR APPROVAL

CONTRACT NO. 11131113/00

JOB ORDER NO. S-13656

DRAWN BY RIZ CHECKED BY JKR

DATE STARTED 24.01.2013 DATE COMPLETED _____

DPRG. DEPT. CTPD ENG. DEPT. AUT-PSAC

ASSEMBLY DRAWING

132/13.8kV GT-1 RELAY PANEL-1 +R05.1

S/S 8709-132/13.8KV IN AL-KHARJ CITY

RIYADH SAUDI ARABIA

الشركة الوطنية لنقل الكهرباء

نقل الكهرباء
National Grid SA

INDEX	PLANT NO.	DRAWING NUMBER	SHEET NO. SHT	SHEET NO. CONT.	REV. NO.
-	C421	CD-322926	G02	G03	00

NG/D2-0 (2012/01)

DMS VECTOR NGD200

THIS DRAWING AND THE INFORMATION CONTAINED HEREIN ARE THE SOLE PROPERTY OF National Grid SA NO REPRODUCTION IN FULL OR IN PART SHALL BE OBTAINED FROM THIS DOCUMENT WITHOUT THE WRITTEN CONSENT OF ITS OWNER.

BASE PLATE/ FOUNDATION

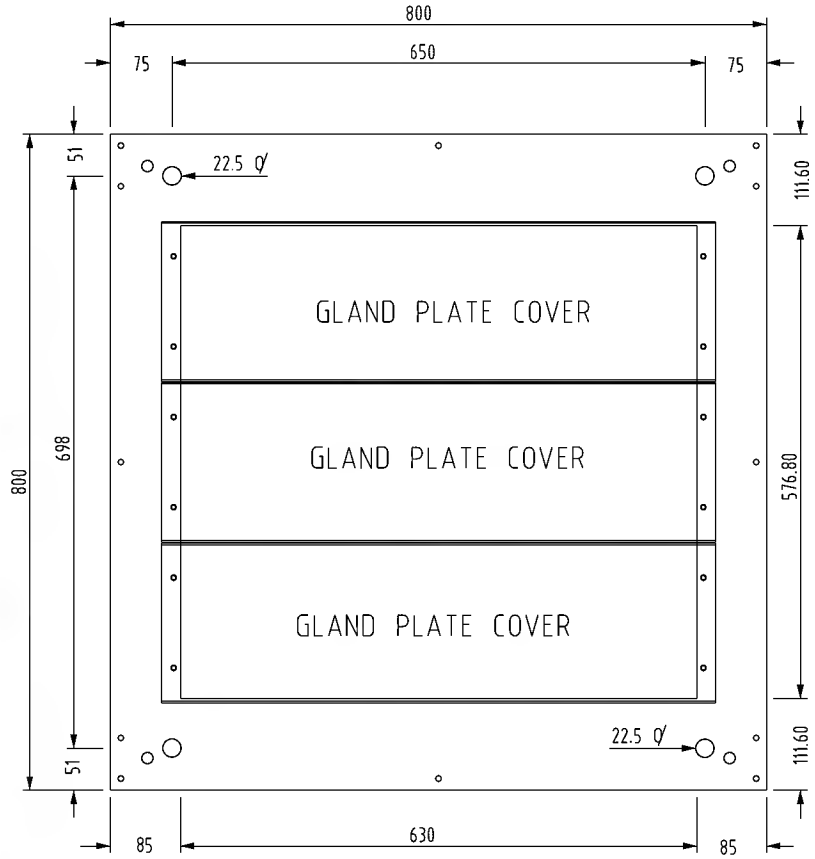

PLAN

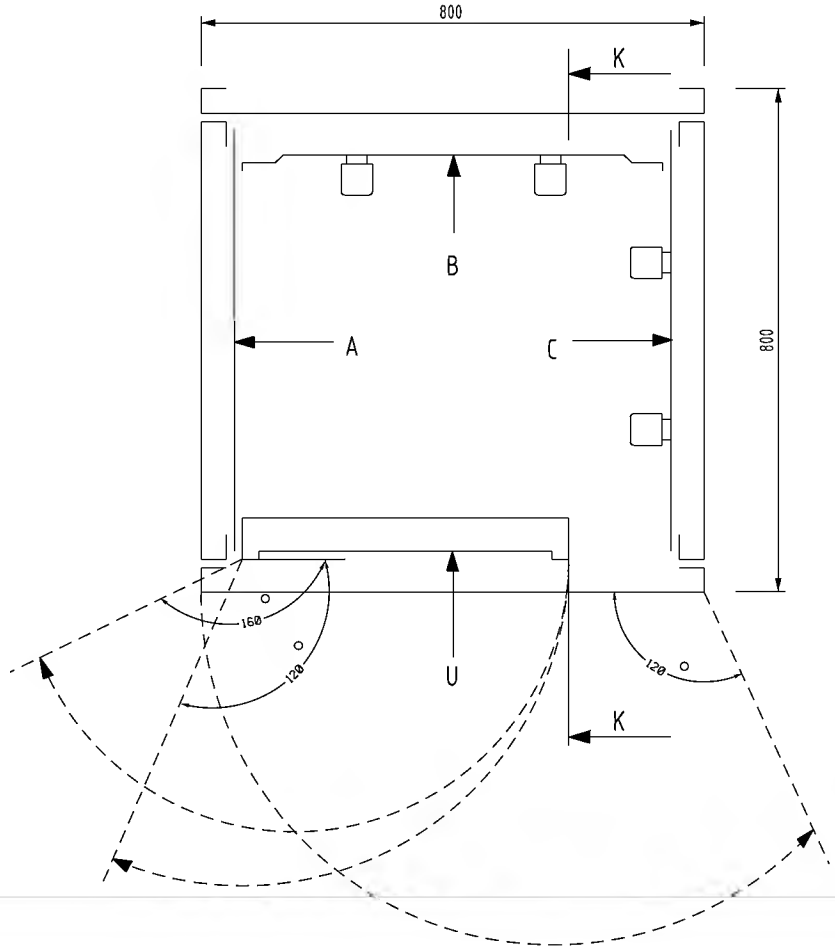

AS-BUILT BY _____ DATE _____	CONTRACT NO. 11131113/00	JOB ORDER NO. S-13656	ASSEMBLY DRAWING	نقل الكهرباء الشركة الوطنية لنقل الكهرباء National Grid SA
	DRAWN BY RIZ CHECKED BY JKR		132/13.8kV GT-1 RELAY PANEL-1 +R05.1	
00 / 13 04 / FOR APPROVAL	DATE STARTED 24.01.2013 DATE COMPLETED _____		S/S 8709-132/13.8KV IN AL-KHARJ CITY	
REV. NO. / DATE / DESCRIPTION	OPRG. DEPT. CTPD ENG. DEPT. AUT-PSAC		RIYADH SAUDI ARABIA	

INDEX	PLANT NO.	DRAWING NUMBER	SHEET NO. SHT	SHEET NO. CONT.	REV. NO.
-	C421	CD-322926	G03	G04	00

NG/D2-0 (2012/01)

DMS | VECTOR | NGD200

THIS DRAWING AND THE INFORMATION CONTAINED HEREIN ARE THE SOLE PROPERTY OF National Grid SA NO REPRODUCTION IN FULL OR IN PART SHALL BE OBTAINED FROM THIS DOCUMENT WITHOUT THE WRITTEN CONSENT OF ITS OWNER.

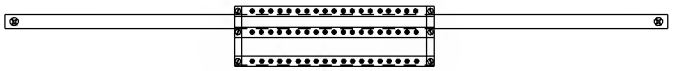

TOP VIEW FOR EARTHING BAR

U PLANE TOP LABEL

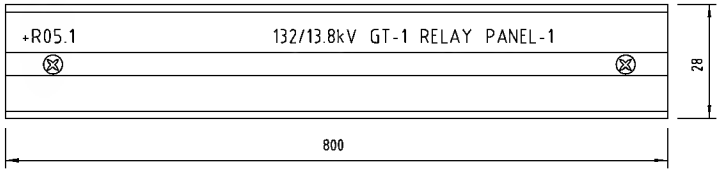

MANUFACTURING LABEL

ABB ABB Automation Co.Ltd.

PROJECT	:	National Grid SA S/S 8709
ORDER REFERENCE	:	2875 RF S13656
YEAR OF MANUFACTURE	:	2013
PANEL NO.	:	+R05.1
DRAWING NO.	:	S13656-CD-323928

MADE IN THE KINGDOM OF SAUDI ARABIA

U PLANE BOTTOM LABEL

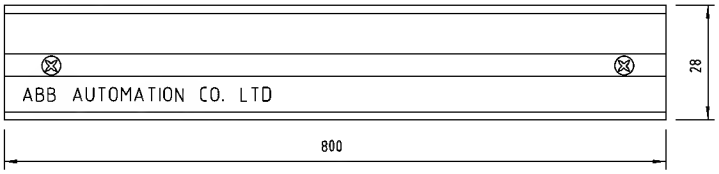

REV. NO.	DATE	DESCRIPTION
00	13 04	FOR APPROVAL

AS-BUILT BY _____ DATE _____

CONTRACT NO. 11131113/00 | JOB ORDER NO. S-13656

DRAWN BY RIZ CHECKED BY JKR

DATE STARTED 24.01.2013 DATE COMPLETED _____

DPRG. DEPT. CTPD ENG. DEPT. AUT-PSAC

ASSEMBLY DRAWING

132/13.8kV GT-1 RELAY PANEL-1 +R05.1

S/S 8709-132/13.8KV IN AL-KHARJ CITY

RIYADH SAUDI ARABIA

الشركة الوطنية لنقل الكهرباء

نقل الكهرباء National Grid SA

INDEX	PLANT NO.	DRAWING NUMBER	SHEET NO. SHT	SHEET NO. CONT.	REV. NO.
-	C421	CD-322926	G04	L00	00

NG/D2-0 (2012/01)

DMS VECTOR NGD200

THIS DRAWING AND THE INFORMATION CONTAINED HEREIN ARE THE SOLE PROPERTY OF National Grid SA NO REPRODUCTION IN FULL OR IN PART SHALL BE OBTAINED FROM THIS DOCUMENT WITHOUT THE WRITTEN CONSENT OF ITS OWNER.

POWER SYSTEMS NETWORK MANAGEMENT
PROTECTION AND SUBSTATION AUTOMATION SYSTEMS
WBS NO: S-13656

ABB AUTOMATION COMPANY LTD.,
414, AL-KHARJ ROAD
SECOND INDUSTRIAL CITY
RIYADH-11383 K.S.A

CONTRACTOR : ABB Contracting Company

CLIENT : National Grid SA

PROJECT : CONSTRUCTION OF NEW 132/13.8kV SS 8709 IN AL-KHARJ CITY

SUBSTATION : S/S 8709

CONTRACT NO. : 11131113/00

TITLE : LIST OF APPARATUS +R05.1 [GT-1]

00	13 04	FOR APPROVAL
REV. NO.	DATE	DESCRIPTION

AS-BUILT BY _____ DATE _____ | CONTRACT NO. 11131113/00 | JOB ORDER NO. S-13656

DRAWN BY RIZ CHECKED BY JKR
DATE STARTED 24.01.2013 DATE COMPLETED _____
ORG. DEPT. CTPD ENG. DEPT. AUT-PSAC

COVER SHEET
132/13.8kV GT-1 RELAY PANEL-1 +R05.1
S/S 8709-132/13.8KV IN AL-KHARJ CITY
RIYADH SAUDI ARABIA

الشركة الوطنية لنقل الكهرباء
نقل الكهرباء
National Grid SA

INDEX	PLANT NO.	DRAWING NUMBER	SHEET NO. SHT	SHEET NO. CONT.	REV. NO.
-	C421	CD-322926	L00	L01	00

NG/D2-0 (2012/01)
DMS VECTOR NGD200

THIS DRAWING AND THE INFORMATION CONTAINED HEREIN ARE THE SOLE PROPERTY OF National Grid SA NO REPRODUCTION IN FULL OR IN PART SHALL BE OBTAINED FROM THIS DOCUMENT WITHOUT THE WRITTEN CONSENT OF ITS OWNER.

SR. NO.	GA REF.	SCH. REF.	D E S C R I P T I O N	SHEET NO.	QTY.	TYPE	MAKE	ORDERING INFORMATION
			RELAY CUBICLE- +R05.1 ACCOMODATING THE FOLLOWING					
1	U05.S001	B7T-1	NUMERICAL TRANSFORMER PROTECTION IED WITH FOLLOWING DETAILS	301	1	RET 670×1	ABB	1MRK 004 B16-DC
			FUNCTIONS					
			-CONFIGURATION ALTERNATIVE		1			1MRK 004 005-DC
			DOUBLE BREAKER, 3WINDING (B40) BASIC					
			-CONTROL					
			HARDWARE					
			-ANALOG SYSTEM					
			TRANSFORMER INPUT MODULE,RING LUG TERMINALS 91+3U,1A					
			110/220/V,50/60HZ/(TRM)/ (BASIC SELECTED ALTERNATIVE) LOCATION/P40/					
			TRANSFORMER INPUT MODULE,RING LUG TERMINALS 91+3U,1A					
			110/220/V,50/60HZ/(TRM)/ (BASIC SELECTED ALTERNATIVE) LOCATION/P41/					
			-CASING					
			POWER SUPPLY MODULE 90-250 VDC (PSM)					
			LOCATION P1/					
			NUMERIC PROCESSING MODULE 600MHZ, 256MB (NUM) BASIC					
			LOCATION/P30/					
			3/4 \SX 19" RACK CASING MAX 5 I/O MOD,					
			2TRM (RACK)					
			COMBINED BACKPLANE MODULE MAX 5 I/O MOD.					
			(BASIC SELECTED ALTERNATIVE) 2TRM (RACK)					
			UNIVERSAL BACKPLANE MODULE 2 ADM,2TRM (UBM) BASIC					
			-CONNECTION TYPE					
			STANDARD COMPRESSION CONNECTION TERMINALS)					
			LOCATION/P1-P16					
			-HUMAN MACHINE INTERFACE					
			MEDIUM GRAPHIC HMI,15 CONTROLLABLE OBJECTS					
			3/4 X 19" IEC (MHMI)					
			-IN/OUT MODULES					
			BINARY INPUT MODULE LOCATION P3,P5		2			1MRK 000 508-BB
			BINARY OUTPUT MODULE,24 OUTPUT RELAYS (BOM)		2			1MRK 000 614-AB
			LOCATION P4					
			OPTICAL ETHERNET MODULE 2 GLASS INTERFACE IEC61850-8-1/ IEC61850-9-2					1MRK 002 266-AA
			(OEM) (SELECTED OPTION) LOCATION P31:1					
2	U12.S001	TS-1	TEST SWITCH FOR RET670 RELAY	222	1	RTXP18	ABB	RK 926 115-BH
	U12.S002	TS-2	TEST SWITCH FOR RET670 RELAY	222	1	RTXP18	ABB	RK 926 115-BB

REV. NO.	DATE	DESCRIPTION
00	13 04	FOR APPROVAL

AS-BUILT BY _____ DATE _____

CONTRACT NO. 11131113/00 JOB ORDER NO. S-13656

DRAWN BY RIZ CHECKED BY JKR

DATE STARTED 24.01.2013 DATE COMPLETED _____

DPRG. DEPT. CTPD ENG. DEPT. AUT-PSAC

LIST OF APPARATUS

132/13.8kV GT-1 RELAY PANEL-1 +R05.1

S/S 8709-132/13.8KV IN AL-KHARJ CITY

RIYADH SAUDI ARABIA

الشركة الوطنية لنقل الكهرباء

نقل الكهرباء National Grid SA

INDEX	PLANT NO.	DRAWING NUMBER	SHEET NO. SHT	SHEET NO. CONT.	REV. NO.
-	C421	CD-322926	L01	L02	00

NG/D2-D (2012/01)

OMS VECTOR NGD200

THIS DRAWING AND THE INFORMATION CONTAINED HEREIN ARE THE SOLE PROPERTY OF National Grid SA NO REPRODUCTION IN FULL OR IN PART SHALL BE OBTAINED FROM THIS DOCUMENT WITHOUT THE WRITTEN CONSENT OF ITS OWNER.

SR. NO.	GA REF.	SCH. REF.	D E S C R I P T I O N	SHEET NO.	QTY.	TYPE	MAKE	ORDERING INFORMATION
3	U16.5001	S86T1	PUSH BUTTON BLACK COLOUR, WITH 1NO+1NC CONTACTS	232	1	MP1-10B	ABB	1SFA 611 100 R1006
			FOR RESET OF LOCKOUT RELAY (86T1)			MCBH-20		1SFA 611 605 R1102
4	U16.5002	S86CBF	PUSH BUTTON BLACK COLOUR, WITH 1NO+1NC CONTACTS	276	1	MP1-10B	ABB	1SFA 611 100 R1006
			FOR RESET OF LOCKOUT RELAY (86CBF)			MCBH-20		1SFA 611 605 R1102
5	U16.5003	S86B-1	PUSH BUTTON BLACK COLOUR, WITH 1NO+1NC CONTACTS	276	1	MP1-10B	ABB	1SFA 611 100 R1006
			FOR RESET OF LOCKOUT RELAY (86B-1)			MCBH-20		1SFA 611 605 R1102
6	U16.5004	S86B-2	PUSH BUTTON BLACK COLOUR, WITH 1NO+1NC CONTACTS	277	1	MP1-10B	ABB	1SFA 611 100 R1006
			FOR RESET OF LOCKOUT RELAY (86B-2)			MCBH-20		1SFA 611 605 R1102

REV. NO.	DATE	DESCRIPTION
00	13 04	FOR APPROVAL

AS-BUILT BY _____ DATE _____

CONTRACT NO. 11131113/00 JOB ORDER NO. S-13656

DRAWN BY RIZ CHECKED BY JKR

DATE STARTED 24.01.2013 DATE COMPLETED _____

OPRG. DEPT. CTPD ENG. DEPT. AUT-PSAC

LIST OF APPARATUS

132/13.8kV GT-1 RELAY PANEL-1 +R05.1

S/S 8709-132/13.8KV IN AL-KHARJ CITY

RIYADH SAUDI ARABIA

الشركة الوطنية لنقل الكهرباء

نقل الكهرباء National Grid SA

INDEX	PLANT NO.	DRAWING NUMBER	SHEET NO. SHT	SHEET NO. CONT.	REV. NO.
-	C421	CD-322926	L02	L03	00

NG/D2-0 (2012/01)

DMS VECTOR NGD200

THIS DRAWING AND THE INFORMATION CONTAINED HEREIN ARE THE SOLE PROPERTY OF National Grid SA NO REPRODUCTION IN FULL OR IN PART SHALL BE OBTAINED FROM THIS DOCUMENT WITHOUT THE WRITTEN CONSENT OF ITS OWNER.

SR. NO.	GA REF.	SCH. REF.	DESCRIPTION	SHEET NO.	QTY.	TYPE	MAKE	ORDERING INFORMATION
7	U25.5001	86T1	TRIP UNIT COMPRISING OF:	232,276	2	MVAJ105	ALSTOM	MVAJ105 RA0B04A
	U25.5003	86CBF	TRIPPING RELAY : HIGH BURDEN TYPE					
			AUX.VOLTAGE : 110-125V DC					
			CONTACTS : 6NO + 4NC ELECTRICAL AND HANO RESET					
			FLAGING : HAND RESET					
			CONTACT MECHANISM : HAND & ELECTRICALLY RESET					
8	U25.5002	94T1	TRIP UNIT (94T1) COMPRISING OF:	232	1	MVAJ101	ALSTOM	MVAJ101RA0800A
			AUX. VOLTAGE : 110/125V DC					
			CONTACT DATA : 10 NO, SELF RESET					
			FLAGING : HAND RESET					
9	U25.5004	86B-1	TRIP UNIT COMPRISING OF:	276,277	2	MVAJ205	ALSTOM	MVAJ205TA0804A
	U25.5005	86B-2	TRIPPING RELAY : HIGH BURDEN TYPE					
			AUX.VOLTAGE : 110-125V DC					
			CONTACTS : 16NO + 4NC ELECTRICAL AND HAND RESET					
			FLAGING : HAND RESET					
			CONTACT MECHANISM : HAND & ELECTRICALLY RESET					
10	U29.101	74R1/74RS	DUAL TARGET RELAY (REVERSE FLAG) "±R1 DC SUPPLY FAIL	232	1	RXSF 1	ABB	RK 271 019-AN
			AUXILIARY VOLTAGE : 110-125V DC					
			CONTACT DATA : 1NO + 2NC PER COIL					
			FLAG : SELF RESET					
11	U29.107	TMR/86B-1	DELAY FOR PICKUP RELAY	276/277	2	RXKL 1	ABB	RK 271 019-AN
	U29.301	TMR/86B-2	AUXILIARY VOLTAGE : 24-250V DC					
			CONTACT DATA : 2 C/O					
12	U29.307	R1	RESISTOR UNIT FOR TCS	291	1	RXTMA1	ABB	RK 711 008-AF
			RESISTOR WATT : 6.8K OHMS					

REV. NO.	DATE	DESCRIPTION
00	13 04	FOR APPROVAL

AS-BUILT BY _____ DATE _____

CONTRACT NO. 11131113/00 JOB ORDER NO. S-13656

DRAWN BY RIZ CHECKED BY JKR

DATE STARTED 24.01.2013 DATE COMPLETED _____

DPRG. DEPT. CTPD ENG. DEPT. AUT-PSAC

LIST OF APPARATUS

132/13.8kV GT-1 RELAY PANEL-1 +R05.1

S/S 8709-132/13.8KV IN AL-KHARJ CITY

RIYADH SAUDI ARABIA

الشركة الوطنية لنقل الكهرباء

نقل الكهرباء National Grid SA

INDEX	PLANT NO.	DRAWING NUMBER	SHEET NO. SHT	SHEET NO. CONT.	REV. NO.
-	C421	CD-322926	L03	L04	00

NG/D2-0 (2012/01)

OMS VECTOR NGD200

THIS DRAWING AND THE INFORMATION CONTAINED HEREIN ARE THE SOLE PROPERTY OF National Grid SA NO REPRODUCTION IN FULL OR IN PART SHALL BE OBTAINED FROM THIS DOCUMENT WITHOUT THE WRITTEN CONSENT OF ITS OWNER.

SR. NO.	GA REF.	SCH. REF.	DESCRIPTION	SHEET NO.	QTY.	TYPE	MAKE	ORDERING INFORMATION
13			MCB 2 POLE 6A, FOR DC SUPPLY	216	3	S282 UC K6	ABB	GHS S282 064 R0317
			WITH 2NC AUXILIARY CONTACT			S2-H02		GH S270 1916 R0003
	U39.5001	Q1	R1± SUPPLY					
	U39.5002	Q2	RS± SUPPLY					
	U36.5001	Q3	TC1± SUPPLY					
14	U39.5003	C01	CONVENIENCE OUTLET 10A, 127V AC	211	2	USM45&USMS45	ABB	74140 & 74180
		C02	CONVENIENCE OUTLET 10A, 220V AC					
15		C1,C2	MINIATURE CIRCUIT BREAKER, 2 POLE, 10A FOR	211	2	S202-K10	ABB	2CDS 252 001 R0427
			CONVENIENCE OUTLET WITH AUXILIARY SWITCH, 1NO + 1NC CONTACTS			S2C-H11L		GH 270 1917 R001
16		C3	THERMOSTAT FOR SPACE HEATER, 5-60°C	211	1	SK 3110	RITTAL	SK 3110
17	U39.5004	TJ	TELEPHONE JACK 1GANG 4WIRE	211	1	EDF410	EDISON	EDF410
18		C7	ON/OFF SWITCH FOR SPACE HEATER	211	1	M2SS1-10B	ABB	1SFA 611 200 R1006
						MCBH-10		1SFA 611 605 R1101
19		DS	DOOR SWITCH FOR CONTROL OF CUBICLE INTERNAL ILLUMINATION LAMP	211	1	LS30P	ABB	1SBV 010 213 R1202
20		IL	INTERNAL ILLUMINATION CUBICLE LAMP SUITABLE FOR	211	1	T4	SUNON	SP-20W
			127V AC, 60Hz SUPPLY					
21		SH	SPACE HEATER, 150W, 120V, 60Hz	211	1	MICAA	GRUPPO	1FZEK006C001

AS-BUILT BY _____ DATE _____

CONTRACT NO. 11131113/00

JOB ORDER NO. S-13656

REV. NO.	DATE	DESCRIPTION
00	13 04	FOR APPROVAL

DRAWN BY RIZ CHECKED BY JKR

DATE STARTED 24.01.2013 DATE COMPLETED _____

DPRG. DEPT. CTPD ENG. DEPT. AUT-PSAC

LIST OF APPARATUS

132/13.8kV GT-1 RELAY PANEL-1 +R05.1

S/S 8709-132/13.8KV IN AL-KHARJ CITY

RIYADH SAUDI ARABIA

الشركة الوطنية لنقل الكهرباء

نقل الكهرباء
National Grid SA

INDEX	PLANT NO.	DRAWING NUMBER	SHEET NO. SHT	SHEET NO. CONT.	REV. NO.
-	C421	CD-322926	L04	L05	00

NG/D2-0 (2012/01)

DMS VECTOR NGD200

THIS DRAWING AND THE INFORMATION CONTAINED HEREIN ARE THE SOLE PROPERTY OF National Grid SA NO REPRODUCTION IN FULL OR IN PART SHALL BE OBTAINED FROM THIS DOCUMENT WITHOUT THE WRITTEN CONSENT OF ITS OWNER.

SR. NO.	GA REF.	SCH. REF.	DESCRIPTION	SHEET. NO.	QTY.	TYPE	MAKE	ORDERING INFORMATION
22		X1	BLOT CONNECTING TERMINAL BLOCKS DISCONNECTIBLE FOR CT CIRCUITS	304	60	OTTA 6T P/P	PHOENIX	0790462
		X2	SPRING LOADED TERMINAL BLOCKS DISCONNECTIBLE FOR VT CIRCUITS	304	5	D6/8.ST1.RS	ENTRELEC	1SNA 115 831 R0400
		X3	SPRING LOADED TERMINAL BLOCKS DISCONNECTIBLE FOR AC CIRCUITS	304	10	D6/8.ST1.RS	ENTRELEC	1SNA 115 831 R0400
		X41	SPRING LOADED TERMINAL BLOCK FOR DC EXT. CIRCUITS	304	40	D6/8.ST1.RS	ENTRELEC	1SNA 115 831 R0400
		X51	SPRING LOADED TERMINAL BLOCK FOR DC PROTN. CIRCUITS	304	97	M6/8.RS	ENTRELEC	1SNA 115 685 R1200
		X6	SPRING LOADED TERMINAL BLOCK FOR STN COM	304	10	M6/8.RS	ENTRELEC	1SNA 115 685 R1200
		X61	KNIFE TYPE TERMINAL BLOCKS DISCONNECTIBLE FOR STN.-COM ALARM CIRCUITS	304	20	M6/8.SNB	ENTRELEC	1SNA 115 688 R2500
		XTJ	SPRING LOADED TERMINAL BLOCK KNIFE TYPE FOR TELEPHONE JACK	305	5	M6/8.RS	ENTRELEC	1SNA 115 685 R1200
		XSH	SPRING LOADED TERMINAL BLOCKS FOR SPACE HEATER	305	3	M6/8.RS	ENTRELEC	1SNA 115 685 R1200
		XD	TERMINAL BLOCKS WITH BLOCKING DIODE, Vrrm=1kV, If=3A	236,276	3	N476.S	ENTRELEC	11521310
			AND SURGE TRAP, ENERGY ABSORPTION RATING 8J (10/1000mS)			IN5408	MEJDAF	02-049
						V150ZA1	RS	239-270
		X9	SPRING LOADED TERMINAL BLOCK KNIFE TYPE FOR SPARE CONTACTS	295	20	M6/8.RS	ENTRELEC	1SNA 115 685 R1200

REV. NO.	DATE	DESCRIPTION
00	13 04	FOR APPROVAL

AS-BUILT BY _____ DATE _____

CONTRACT NO. 11131113/00 JOB ORDER NO. S-13656

DRAWN BY RIZ CHECKED BY JKR

DATE STARTED 24.01.2013 DATE COMPLETED _____

DPRG. DEPT. CTPD ENG. DEPT. AUT-PSAC

LIST OF APPARATUS

132/13.8kV GT-1 RELAY PANEL-1 +R05.1

S/S 8709-132/13.8KV IN AL-KHARJ CITY

RIYADH SAUDI ARABIA

الشركة الوطنية لنقل الكهرباء

نقل الكهرباء National Grid SA

INDEX	PLANT NO.	DRAWING NUMBER	SHEET NO. SHT	SHEET NO. CONT.	REV. NO.
-	C421	CD-322926	L05	L06	00

NG/D2-0 (2012/01)

DMS VECTOR NGD200

THIS DRAWING AND THE INFORMATION CONTAINED HEREIN ARE THE SOLE PROPERTY OF National Grid SA NO REPRODUCTION IN FULL OR IN PART SHALL BE OBTAINED FROM THIS DOCUMENT WITHOUT THE WRITTEN CONSENT OF ITS OWNER.

LABEL REF.	LABEL ENGRAVING	MATERIALS	ENGRAVING	LABEL SIZE	LETTER SIZE
U05.5001	U05.5001 87T1	TRAFOLITE	BLACK LETTERS ON WHITE BACKGROUND	50X15mm	4mm
U12.5001	U12.5001 TS-1	ALUMINUM PAPER FOIL	BLACK LETTERS	50X10mm	3mm
U12.5002	U12.5002 TS-2	ALUMINUM PAPER FOIL	BLACK LETTERS	50X10mm	3mm
U16.5001	U16.5001 S86T1	TRAFOLITE	BLACK LETTERS ON WHITE BACKGROUND	50X15mm	4mm
U16.5002	U16.5002 S86CBF	TRAFOLITE	BLACK LETTERS ON WHITE BACKGROUND	50X15mm	4mm
U16.5003	U16.5003 S86B-1	TRAFOLITE	BLACK LETTERS ON WHITE BACKGROUND	50X15mm	4mm
U16.5004	U16.5004 S86B-2	TRAFOLITE	BLACK LETTERS ON WHITE BACKGROUND	50X15mm	4mm
U25.5001	U25.5001 86T1	TRAFOLITE	BLACK LETTERS ON WHITE BACKGROUND	50X15mm	4mm
U25.5002	U25.5002 94T1	TRAFOLITE	BLACK LETTERS ON WHITE BACKGROUND	50X15mm	4mm
U25.5003	U25.5003 86CBF	TRAFOLITE	BLACK LETTERS ON WHITE BACKGROUND	50X15mm	4mm
U25.5004	U25.5004 86B-1	TRAFOLITE	BLACK LETTERS ON WHITE BACKGROUND	50X15mm	4mm
U25.5005	U25.5005 86B-2	TRAFOLITE	BLACK LETTERS ON WHITE BACKGROUND	50X15mm	4mm
U29.101	U29.101 74R1	ALUMINUM PAPER FOIL	BLACK LETTERS	50X10mm	3mm
U29.107	U29.107 TMR/86B-1	ALUMINUM PAPER FOIL	BLACK LETTERS	50X10mm	3mm
U29.301	U29.301 TMR/86B-2	ALUMINUM PAPER FOIL	BLACK LETTERS	50X10mm	3mm
U29.307	U29.307 R2	ALUMINUM PAPER FOIL	BLACK LETTERS	50X10mm	3mm
U29.113	U29.113 R1	ALUMINUM PAPER FOIL	BLACK LETTERS	50X10mm	3mm
U39.5001	U39.5001 O1	ALUMINUM PAPER FOIL	BLACK LETTERS	50X10mm	3mm
U39.5002	U39.5002 O2	ALUMINUM PAPER FOIL	BLACK LETTERS	50X10mm	3mm
U36.5001	U36.5001 O3	ALUMINUM PAPER FOIL	BLACK LETTERS	50X10mm	3mm

AS-BUILT BY _____ DATE _____

REV. NO.	DATE	DESCRIPTION
00	13 04	FOR APPROVAL

CONTRACT NO. 11131113/00 | JOB ORDER NO. S-13656

DRAWN BY RIZ CHECKED BY JKR

DATE STARTED 24.01.2013 DATE COMPLETED _____

DRWG. DEPT. CTPD ENG. DEPT. AUT-PSAC

LIST OF APPARATUS

132/13.8kV GT-1 RELAY PANEL-1 +R05.1

S/S 8709-132/13.8KV IN AL-KHARJ CITY

RIYADH SAUDI ARABIA

الشركة الوطنية لنقل الكهرباء

نقل الكهرباء
National Grid SA

INDEX	PLANT NO.	DRAWING NUMBER	SHEET NO. SHT	SHEET NO. CONT.	REV. NO.
-	C421	CD-322926	L06	L07	00

NG/D2-0 (2012/01)

DMS | VECTOR | NGD200

THIS DRAWING AND THE INFORMATION CONTAINED HEREIN ARE THE SOLE PROPERTY OF National Grid SA NO REPRODUCTION IN FULL OR IN PART SHALL BE OBTAINED FROM THIS DOCUMENT WITHOUT THE WRITTEN CONSENT OF ITS OWNER.

LABEL REF.	LABEL ENGRAVING	MATERIALS	ENGRAVING	LABEL SIZE	LETTER SIZE
C1	C1 127V AC SUPPLY MCB	TRAFOLITE	BLACK LETTERS ON WHITE BACKGROUND	50X15mm	4mm
C2	C2 220V AC SUPPLY MCB	TRAFOLITE	BLACK LETTERS ON WHITE BACKGROUND	50X15mm	4mm
C3	C3 THERMOSTAT	TRAFOLITE	BLACK LETTERS ON WHITE BACKGRDUND	50X15mm	4mm
C7	C7 ON/OFF SWITCH	TRAFOLITE	BLACK LETTERS ON WHITE BACKGROUND	50X15mm	4mm
DS	DS DOOR SWITCH	TRAFOLITE	BLACK LETTERS ON WHITE BACKGROUND	50X15mm	4mm
IL	IL ILLUMINATION LAMP	TRAFOLITE	BLACK LETTERS ON WHITE BACKGROUND	50X15mm	4mm
SH	SH SPACE HEATER	TRAFOLITE	BLACK LETTERS ON WHITE BACKGROUND	50X15mm	4mm

AS-BUILT BY _____ DATE _____ | CONTRACT NO. 11131113/00 | JOB ORDER NO. S-13656

REV. NO.	DATE	DESCRIPTION
00	13 04	FOR APPROVAL

DRAWN BY RIZ CHECKED BY JKR

DATE STARTED 24.01.2013 DATE COMPLETED _____

OPRG. DEPT. CTPD ENG. DEPT. AUT-PSAC

LIST OF APPARATUS

132/13.8kV GT-1 RELAY PANEL-1 +R05.1

S/S 8709-132/13.8KV IN AL-KHARJ CITY

RIYADH SAUDI ARABIA

الشركة الوطنية لنقل الكهرباء

نقل الكهرباء
National Grid SA

INDEX	PLANT NO.	DRAWING NUMBER	SHEET NO. SHT	SHEET NO. CONT.	REV. NO.
-	C421	CD-322926	L07	G00	00

NG/D2-0 (2012/01)

DMS | VECTOR | NGD200

THIS DRAWING AND THE INFORMATION CONTAINED HEREIN ARE THE SOLE PROPERTY OF National Grid SA NO REPRODUCTION IN FULL OR IN PART SHALL BE OBTAINED FROM THIS DOCUMENT WITHOUT THE WRITTEN CONSENT OF ITS OWNER.

POWER SYSTEMS NETWORK MANAGEMENT
PROTECTION AND SUBSTATION AUTOMATION SYSTEMS
WBS NO: S-13656

ABB AUTOMATION COMPANY LTD.,
414, AL-KHARJ ROAD
SECOND INDUSTRIAL CITY
RIYADH-11383 K.S.A

CONTRACTOR : ABB Contracting Company

CLIENT : National Grid SA

PROJECT : CONSTRUCTION OF NEW 132/13.8kV SS 8709 IN AL-KHARJ CITY

SUBSTATION : S/S 8709

CONTRACT NO. : 11131113/00

TITLE : Assembly Drawing +R05.2 [GT-1]

REV. NO.	DATE	DESCRIPTION
00	13 04	FOR APPROVAL

AS-BUILT BY _____ DATE _____ | CONTRACT NO. 11131113/00 | JOB ORDER NO. S-13656

DRAWN BY RIZ CHECKED BY JKR
DATE STARTED 24.01.2013 DATE COMPLETED _____
DPRG. DEPT. CTPD ENG. DEPT. AUT-PSAC

COVER SHEET
132/13.8kV GT-1 RELAY PANEL-2 +R05.2
S/S 8709-132/13.8KV IN AL-KHARJ CITY
RIYADH SAUDI ARABIA

الشركة الوطنية لنقل الكهرباء
نقل الكهرباء
National Grid SA

INDEX	PLANT NO.	DRAWING NUMBER	SHEET NO. SHT	SHEET NO. CONT.	REV. NO.
-	C421	CD-322927	G00	G01	00

NG/D2-0 (2012/01)
DMS VECTOR NGD200

THIS DRAWING AND THE INFORMATION CONTAINED HEREIN ARE THE SOLE PROPERTY OF National Grid SA NO REPRODUCTION IN FULL OR IN PART SHALL BE OBTAINED FROM THIS DOCUMENT WITHOUT THE WRITTEN CONSENT OF ITS OWNER.

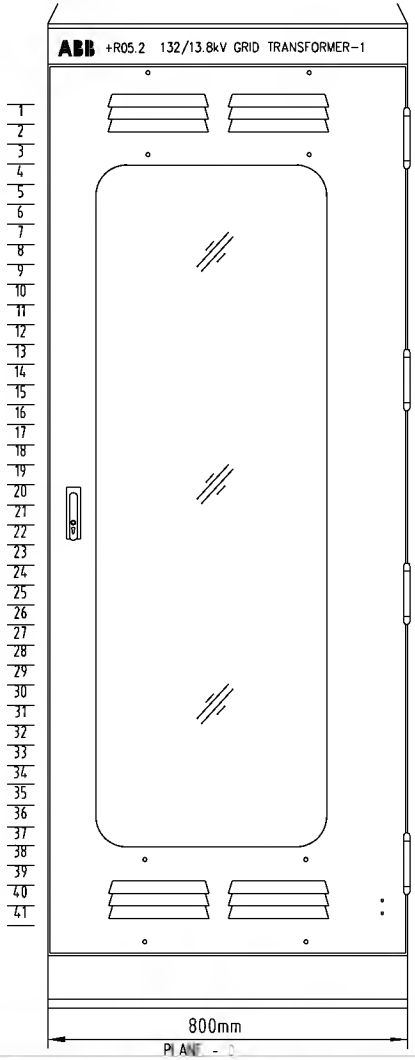

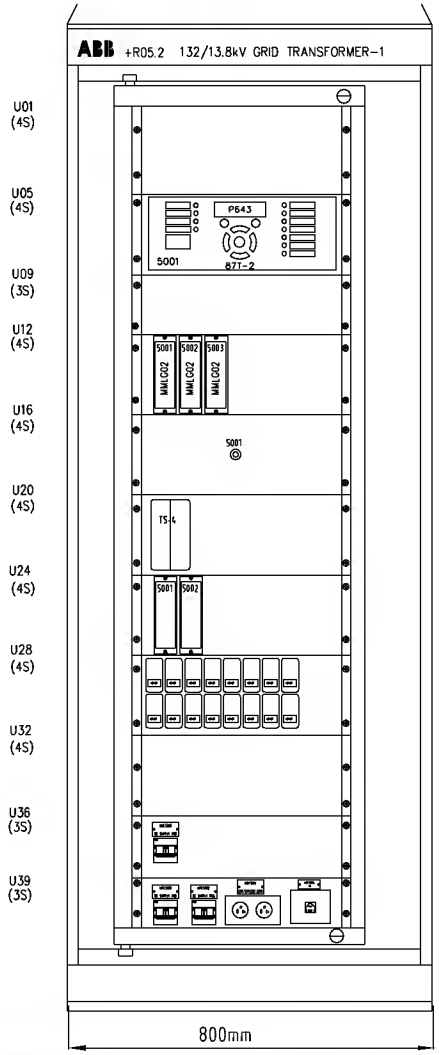

MOUNTING PLANES	
EXTERIOR COLOUR	AIRCRAFT GREY COLOUR TO SHADE NO. RAL7038
INTERIOR COLOUR	SIGNAL WHITE COLOUR TO SHADE NO. RAL9003
CUBICLE TYPE	VSH 200
FRAME	HINGED FRAME, MOVABLE
CUBICLE TYPE	FRONT ACCESS
MATERIAL OF CONSTRUCTION	ALUZINK STEEL
DIMENSIONS	2200 X 800 X 800 mm (H X W X D)
CLASS OF PROTECTION	IP 41
APPROX WEIGHT	200KG
CABLE ENTRY	BOTTOM

REV. NO.	DATE	DESCRIPTION
00	13 04	FOR APPROVAL

AS-BUILT BY _____ DATE _____

CONTRACT NO. 11131113/00

JOB ORDER NO. S-13656

DRAWN BY RIZ CHECKED BY JKR

DATE STARTED 24.01.2013 DATE COMPLETED _____

DPRG. DEPT. CTPD ENG. DEPT. AUT-PSAC

ASSEMBLY DRAWING

132/13.8kV GT-1 RELAY PANEL-2 +R05.2

S/S 8709-132/13.8KV IN AL-KHARJ CITY

RIYADH SAUDI ARABIA

الشركة الوطنية لنقل الكهرباء

نقل الكهرباء National Grid SA

INDEX	PLANT NO.	DRAWING NUMBER	SHEET NO. SHT	SHEET NO. CONT.	REV. NO.
-	C421	CD-322927	G01	G02	00

NG/D2-0 (2012/01)

DMS VECTOR NGD200

THIS DRAWING AND THE INFORMATION CONTAINED HEREIN ARE THE SOLE PROPERTY OF National Grid SA NO REPRODUCTION IN FULL OR IN PART SHALL BE OBTAINED FROM THIS DOCUMENT WITHOUT THE WRITTEN CONSENT OF ITS OWNER.

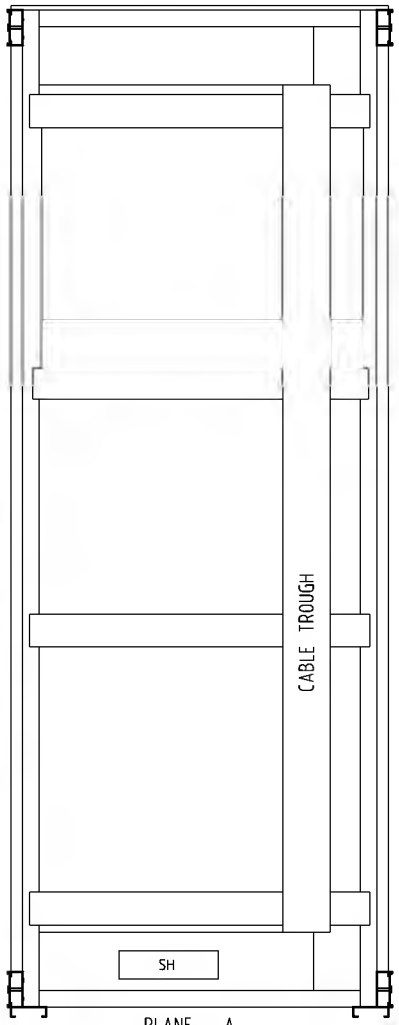

PLANE - A
800mm

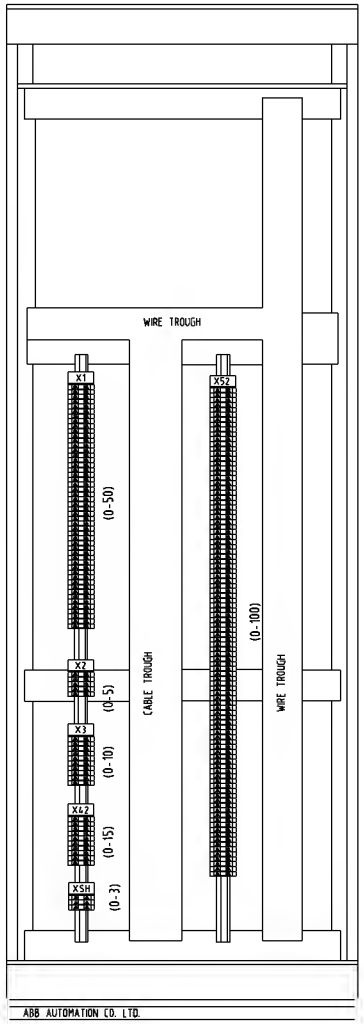

800mm
PLANE - B

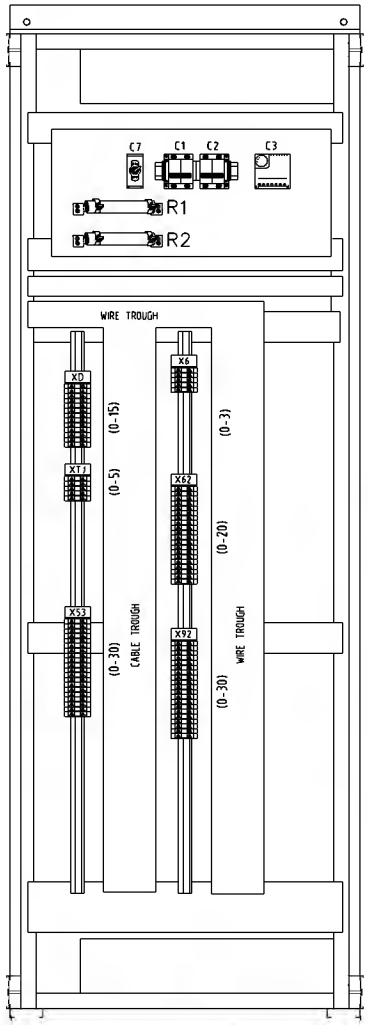

800mm
PLANE - C

PLANE - B

SCH.REF	DESCRIPTION	TYPE	MAKE
X1	CT CIRCUITS	OTTA 6T P/P	PHOENIX
X2	VT CIRCUITS	D6/8.ST1.RS	ENTRELEC
X3	AC INCOMING CIRCUITS	D6/8.ST1.RS	ENTRELEC
X42	DC EXT. CIRCUITS	M6/8.RS	ENTRELEC
X52,X53	DC PROTN. CIRCUITS	M6/8.RS	ENTRELEC
X0	DC INCOMING CIRCUITS	IN540B	MEJOAF
XSH	SPACE HEATER	M6/8.RS	ENTRELEC

PLANE - C

SCH.REF	DESCRIPTION	TYPE	MAKE
XTJ	TELEPHONE JACK	M6/8.RS	ENTRELEC
X6	ALARM SUPPLY	M6/8.RS	ENTRELEC
X62	ALARM CIRCUITS	M6/8.RS	ENTRELEC
X92	SPARE CIRCUITS	M6/8.RS	ENTRELEC

AS-BUILT BY _____ DATE _____

REV. NO.	DATE	DESCRIPTION
00	13 04	FOR APPROVAL

CONTRACT NO. 11131113/00
JOB ORDER NO. S-13656

DRAWN BY RIZ CHECKED BY JKR
DATE STARTED 24.01.2013 DATE COMPLETED _____
DPRG. DEPT. CTPD ENG. DEPT. AUT-PSAC

ASSEMBLY DRAWING
132/13.8kV GT-1 RELAY PANEL-2 +R05.2
S/S 8709-132/13.8KV IN AL-KHARJ CITY
RIYADH SAUDI ARABIA

الشركة الوطنية لنقل الكهرباء
نقل الكهرباء
National Grid SA

INDEX	PLANT NO.	DRAWING NUMBER	SHEET NO. SHT	SHEET NO. CONT.	REV. NO.
-	C421	CD-322927	G02	G03	00

NG/D2-0 (2012/01)
DMS VECTOR NGD200

THIS DRAWING AND THE INFORMATION CONTAINED HEREIN ARE THE SOLE PROPERTY OF National Grid SA NO REPRODUCTION IN FULL OR IN PART SHALL BE OBTAINED FROM THIS DOCUMENT WITHOUT THE WRITTEN CONSENT OF ITS OWNER.

BASE PLATE/ FOUNDATION

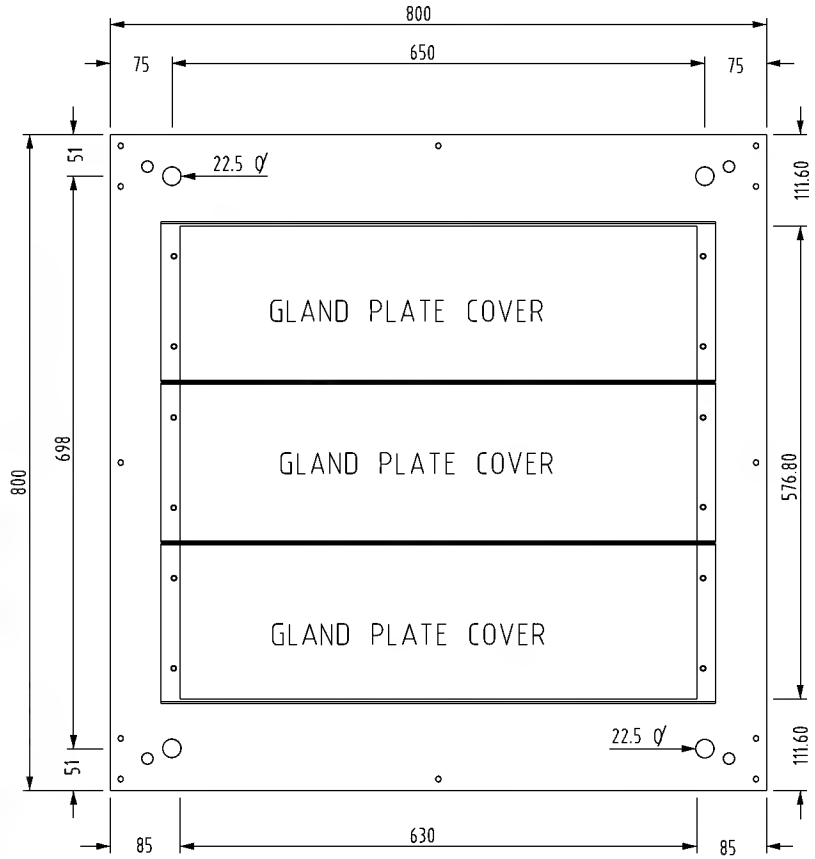

PLAN

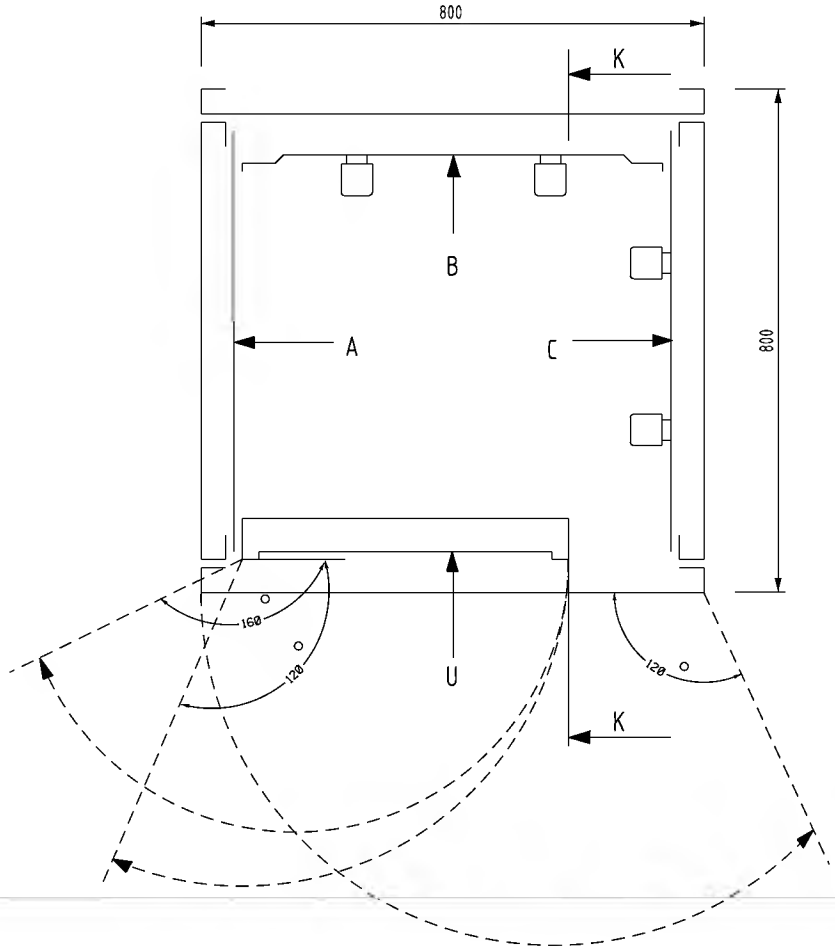

AS-BUILT BY _____ DATE _____	CONTRACT NO. 11131113/00	JOB ORDER NO. S-13656	ASSEMBLY DRAWING	
	DRAWN BY RIZ	CHECKED BY JKR	132/13.8kV GT-1 RELAY PANEL-2 +R05.2	
00 / 13 04 / FOR APPROVAL	DATE STARTED 24.01.2013	DATE COMPLETED _____	S/S 8709-132/13.8KV IN AL-KHARJ CITY	
REV. NO. / DATE / DESCRIPTION	ORG. DEPT. CTPD	ENG. DEPT. AUT-PSAC	RIYADH SAUDI ARABIA	

الشركة الوطنية لنقل الكهرباء
نقل الكهرباء
National Grid SA

INDEX	PLANT NO.	DRAWING NUMBER	SHEET NO. SHT	SHEET NO. CONT.	REV. NO.
-	C421	CD-322927	G03	G04	00

NG/D2-0 (2012/01)

DMS | VECTOR | NGD200

THIS DRAWING AND THE INFORMATION CONTAINED HEREIN ARE THE SOLE PROPERTY OF National Grid SA NO REPRODUCTION IN FULL OR IN PART SHALL BE OBTAINED FROM THIS DOCUMENT WITHOUT THE WRITTEN CONSENT OF ITS OWNER.

SR. NO.	GA REF.	SCH. REF.	D E S C R I P T I O N	SHEET NO.	QTY.	TYPE	MAKE	ORDERING INFORMATION
			RELAY CUBICLE- +R05.2 ACCOMODATING THE FOLLOWING					
1	U05.5001	87T-2	NUMERICAL BIASED DIFFERENTIAL PROTECTION RELAY	501	1	P643	ALSTOM	P643 32 ND 6M0 040K
			WITH THE FOLLOWING FEATURES	502				
			RATED CURRENT : 1A OR 5A					
			RATED FREQUENCY : 60 HZ					
			AUXILIARY VOLTAGE : 110 - 125V DC					
			BINARY INPUTS : 32					
			OUTPUT RELAYS : 16					
			COMMUNICATION PROTOCOL : IEC61850					
2	U12.5001	TS-1	TEST SWITCH FOR P633 RELAY (87T-2)	431	1	MMLG02	ALSTOM	MMLG02 R1AA 0001D
3	U12.5002	TS-2	TEST SWITCH FOR P633 RELAY (87T-2)	431	1	MMLG02	ALSTOM	MMLG02 R1AA 0001D
4	U12.5003	TS-3	TEST SWITCH FOR TRANS.MECH.PROTN	436	1	MMLG02	ALSTOM	MMLG02 R1AA 0001D
5	U16.5001	S86T2	PUSH BUTTON BLACK COLOUR, WITH 1NO+1NC CONTACTS	432	1	MP1-10B	ABB	1SFA 611 100 R1006
			FOR RESET OF LOCKOUT RELAY (86T2)			MCBH-20		1SFA 611 605 R1102
6	U20.101	TS-4	TEST SWITCH FOR MECH PROTN.	436	1	RTXP24	ABB	RK 926 315-AS
7	U24.5001	86T2	TRIP UNIT (86T2) COMPRISING OF:	432	1	MVAJ105	ALSTOM	MVAJ105 RA0804A
			TRIPPING RELAY : HIGH BURDEN TYPE					
			AUX.VOLTAGE : 110-125V DC					
			CONTACTS : 6NO + 4NC					
			FLAG : HAND RESET					
			CONTACT MECHANISM : HAND & ELECTRICALLY RESET					
8	U24.5002	94T2	TRIP UNIT (94T2) COMPRISING OF:	432	1	MVAJ101	ALSTOM	MVAJ101RA0800A
			AUX. VOLTAGE : 110/125V DC					
			CONTACT DATA : 10 NO					
			FLAG : HAND RESET					
			CONTACT MECHANISM : SELF RESET					

AS-BUILT BY _____ DATE _____

REV. NO.	DATE	DESCRIPTION
00	13 04	FOR APPROVAL

CONTRACT NO. 11131113/00 | JOB ORDER NO. S-13656

DRAWN BY RIZ CHECKED BY JKR

DATE STARTED 24.01.2013 DATE COMPLETED _____

DPRG. DEPT. CTPD ENG. DEPT. AUT-PSAC

LIST OF APPARATUS

132/13.8kV GT-1 RELAY PANEL-2 +R05.2

S/S 8709-132/13.8KV IN AL-KHARJ CITY

RIYADH SAUDI ARABIA

الشركة الوطنية لنقل الكهرباء

نقل الكهرباء National Grid SA

INDEX	PLANT NO.	DRAWING NUMBER	SHEET NO. SHT	SHEET NO. CONT.	REV. NO.
-	C421	CD-322927	L01	L02	00

NG/D2-D (2012/01)

OMS | VECTOR | NGD200

THIS DRAWING AND THE INFORMATION CONTAINED HEREIN ARE THE SOLE PROPERTY OF National Grid SA NO REPRODUCTION IN FULL OR IN PART SHALL BE OBTAINED FROM THIS DOCUMENT WITHOUT THE WRITTEN CONSENT OF ITS OWNER.

SR. NO.	GA REF.	SCH. REF.	DESCRIPTION	SHT.	QTY.	TYPE	MAKE	ORDER INFORMATION
9			DUAL COIL TARGET RELAY FOR MECHANICAL PROTECTION	433	11	RXSF 1	ABB	RK 271 018-AN
			AUXILIARY VOLTAGE : 110-125V DC	434				
			CONTACT DATA : 3NO PER COIL	435				
			FLAG : HAND RESET	436				
	U28.101	23X	A: TRANSFORMER COOLER FAIL					
		63OL-1X	B: MAIN TANK OIL LEVEL LOW ALARM					
	U28.107	63OH-1X	A: MAIN TANK OIL LEVEL HIGH ALARM					
		63OL-2X	B: OLTC OIL LEVEL LOW ALARM					
	U28.301	63OH-2X	A: OLTC OIL LEVEL HIGH ALARM					
		96D-1X	B: MAIN TANK PRESS RELIEF ALARM					
	U28.307	96D-2X	A: OLTC PRESS RELIEF ALARM					
		96D-1X	B: BUCHLZ STAGE-1 ALARM					
	U28.113	63OP-1X	A: OLTC PROTECTIVE ALARM					
		63OD-1X	B: GAS OETECT RELAY ALARM					
	U28.313	26D-1X	A: MAIN TR OIL TEMP STAGE-1 ALARM					
		26D-2X	B: MAIN TR OIL TEMP STAGE-2 ALARM					
	U28.119	49W1-5X	A: WOG TEMP STAGE-2 ALARM (HV)					
		49W1-6X	B: WDG TEMP STAGE-2 TRIP (HV)					
	U28.319	63 OSX	A: SUDDEN PRESSURE TRIP					
		96-2X	B: BUCHLZ STAGE-2 TRIP					
	U28.125	63 OP-2X	A: OLTC TRIP PROTECTIVE RELAY TRIP					
		49W2-5X	B: WOG TEMP HIGH STAGE-1 TRIP (LV)					
	U28.325	49 W2-6X	A: WDG TEMP HIGH STAGE-2 TRIP (LV)					
		FPX	B: FIRE PROTN.					
	U28.343	96-3	A: BUCHLZ CONSERVATOR ALARM					
		96-4	B: BUCHLZ CONSERVATOR TRIP					
	U28.131	74R2	DUAL TARGET RELAY REVERSE FLAG +R2 & R3 DC/SUPPLY SPARE	432	2	RXSF 1	ABB	RK 271 019-AN
	U28.331	74R3	AUXILIARY VOLTAGE : 110-125V DC	436				
			CONTACT DATA : 1NO + 2NC PER COIL					
			FLAG : SELF RESET					
	U28.137	63/96X	HIGH SPEED TRIP RELAY)					
	U28.143	49X	AUXILIARY VOLTAGE : 110-125V DC	436	2	RXMS 1	ABB	RK 216 463-AP
			CONTACT DATA : 6NO					
	U28.337	T1	TIMER FOR MECHANICAL PROTECTION					
			AUXILIARY VOLTAGE : 110-125V DC	436	1	RXKL 1	ABB	1MRK 000 066-AB
			CONTACT DATA : 2C/O					

AS-BUILT BY _____ DATE _____

REV. NO.	DATE	DESCRIPTION
00	13 04	FOR APPROVAL

CONTRACT NO. 11131113/00 | JOB ORDER NO. S-13656

DRAWN BY RIZ CHECKED BY JKR

DATE STARTED 24.01.2013 DATE COMPLETED _____

DPRG. DEPT. CTPD ENG. DEPT. AUT-PSAC

LIST OF APPARATUS

132/13.8kV GT-1 RELAY PANEL-2 +R05.2

S/S 8709-132/13.8KV IN AL-KHARJ CITY

RIYADH SAUDI ARABIA

الشركة الوطنية لنقل الكهرباء

نقل الكهرباء National Grid SA

INDEX	PLANT NO.	DRAWING NUMBER	SHEET NO. SHT	SHEET NO. CONT.	REV. NO.
-	C421	CD-322927	L02	L03	00

NG/D2-D (2012/01)

DMS | VECTOR | NGD200

THIS DRAWING AND THE INFORMATION CONTAINED HEREIN ARE THE SOLE PROPERTY OF National Grid SA NO REPRODUCTION IN FULL OR IN PART SHALL BE OBTAINED FROM THIS DOCUMENT WITHOUT THE WRITTEN CONSENT OF ITS OWNER.

SR. NO.	GA REF.	SCH. REF.	DESCRIPTION	SHT.	QTY.	TYPE	MAKE	ORDER INFORMATION
10			MCB 2 POLE 6A, FOR DC SUPPLY	416	3	S282 UC K6	ABB	GHS S282 0164 R0317
			WITH 2NC AUXILIARY CONTACT			S2-H02		GH S270 191 6R0003
	U39.5001	Q1	R2± SUPPLY					
	U39.5002	Q2	R3± SUPPLY					
	U36.5001	Q3	TC2 SUPPLY					
11	U39.5003	C01	CONVENIENCE OUTLET 10A, 127V AC	411	2	USM45&USMS45	ABB	74140 & 74180
		C02	CONVENIENCE OUTLET 10A, 220V AC					
		C1,C2	MINIATURE CIRCUIT BREAKER, 2 POLE, 10A FOR	411	2	S202-C10	ABB	2CDS 252 001 R0427
			CONVENIENCE OUTLET WITH AUXILIARY SWITCH, 1NO + 1NC CONTACTS			S2C-H11L		GH 270 1917 R001
		C3	THERMOSTAT FOR SPACE HEATER, 5-60¾C	411	1	SK 3110	RITTAL	SK 3110
12	U39.5004	TJ	TELEPHONE JACK 1GANG 4WIRE	411	1	EDF410	EDISON	EDF410
		C7	ON/OFF SWITCH FOR SPACE HEATER	411	1	M2SS1-10B	ABB	1SFA 611 200 R1006
						MCBH-10		1SFA 611 605 R1101
		DS	DOOR SWITCH FOR CONTROL OF CUBICLE INTERNAL ILLUMINATION LAMP	411	1	LS30P	ABB	1SBV 010 213 R1202
		IL	INTERNAL ILLUMINATION CUBICLE LAMP SUITABLE FOR	411	1	T4	SUNON	SP-20W
			127V AC, 60Hz SUPPLY					
		SH	SPACE HEATER, 150W, 120V, 60Hz	411	1	MICAA	GRUPPO	1FZEK006C001
13		R1	FIXED RESISTOR FOR TRIP CIRCUIT SUPERVISION CKT.	491	2	GRF 30/200	DANOTHERM	GRF 30/200
		R2	2.5Kohm,15W					

REV. NO.	DATE	DESCRIPTION
00	13 04	FOR APPROVAL

AS-BUILT BY _____ DATE _____

CONTRACT NO. 11131113/00 | JOB ORDER NO. S-13656

DRAWN BY RIZ CHECKED BY JKR

DATE STARTED 24.01.2013 DATE COMPLETED _____

OPRG. DEPT. CTPD ENG. DEPT. AUT-PSAC

LIST OF APPARATUS

132/13.8kV GT-1 RELAY PANEL-2 +R05.2

S/S 8709-132/13.8KV IN AL-KHARJ CITY

RIYADH SAUDI ARABIA

الشركة الوطنية لنقل الكهرباء

نقل الكهرباء National Grid SA

INDEX	PLANT NO.	DRAWING NUMBER	SHEET NO. SHT	SHEET NO. CONT.	REV. NO.
-	C421	CD-322927	L03	L04	00

NG/D2-0 (2012/01)

DMS | VECTOR | NGD200

THIS DRAWING AND THE INFORMATION CONTAINED HEREIN ARE THE SOLE PROPERTY OF National Grid SA NO REPRODUCTION IN FULL OR IN PART SHALL BE OBTAINED FROM THIS DOCUMENT WITHOUT THE WRITTEN CONSENT OF ITS OWNER.

SR. NO.	GA REF.	SCH. REF.	D E S C R I P T I O N	SHEET. NO.	QTY.	TYPE	MAKE	ORDERING INFORMATION
13		X1	BLOT CONNECTING TERMINAL BLOCKS DISCONNECTIBLE FOR CT CIRCUITS	S02	45	OTTA 6T P/P	PHOENIX	0790462
		X2	SPRING LOADED TERMINAL BLOCKS DISCONNECTIBLE FOR VT CIRCUITS	S02	10	D6/8.ST1.RS	ENTRELEC	1SNA 115 831 R0400
		X3	SPRING LOADED TERMINAL BLOCKS DISCONNECTIBLE FOR AC CIRCUITS	S02	10	D6/8.ST1.RS	ENTRELEC	1SNA 115 831 R0400
		X42	SPRING LOADED TERMINAL BLOCK FOR DC EXT. CIRCUITS	502	25	D6/8.ST1.RS	ENTRELEC	1SNA 115 831 R0400
		X52	SPRING LOADED TERMINAL BLOCK FOR DC PROTN. CIRCUITS	502	90	M6/8.RS	ENTRELEC	1SNA 115 685 R1200
		X6	KNIFE TYPE TERMINAL BLOCKS DISCONNECTIBLE FOR STN.-COM ALARM CIRCUITS	502	5	M6/8.RS	ENTRELEC	1SNA 115 685 R1200
		X62	KNIFE TYPE TERMINAL BLOCKS DISCONNECTIBLE FOR STN.-COM ALARM CIRCUITS	502	35	M6/8.SNB	ENTRELEC	1SNA 115 688 R2500
		XTJ	SPRING LOADED TERMINAL BLOCK KNIFE FOR TELEPHONE JACK	502	5	M6/8.RS	ENTRELEC	1SNA 115 685 R1200
		XSH	SPRING LOADED TERMINAL BLOCKS FOR SPACE HEATER	502	3	M6/8.RS	ENTRELEC	1SNA 115 685 R1200
		XD	TERMINAL BLOCKS WITH BLOCKING DIODE, Vrrm=1kV, If=3A	436	10	N476.S	ENTRELEC	11521310
			AND SURGE TRAP, ENERGY ABSORPTION RATING 8J (10/1000mS)			IN5408	MEJDAF	02-049
						V150ZA1	RS	239-270
		X92	SPRING LOADED TERMINAL BLOCK KNIFE TYPE FOR SPARE CONTACTS	502	20	M6/8.RS	ENTRELEC	1SNA 115 685 R1200

REV. NO.	DATE	DESCRIPTION
00	13 04	FOR APPROVAL

AS-BUILT BY _____ DATE _____

CONTRACT NO. 11131113/00 JOB ORDER NO. S-13656

DRAWN BY RIZ CHECKED BY JKR

DATE STARTED 24.01.2013 DATE COMPLETED _____

DPRG. DEPT. CTPD ENG. DEPT. AUT-PSAC

LIST OF APPARATUS

132/13.8kV GT-1 RELAY PANEL-2 +R05.2

S/S 8709-132/13.8KV IN AL-KHARJ CITY

RIYADH SAUDI ARABIA

الشركة الوطنية لنقل الكهرباء

نقل الكهرباء National Grid SA

INDEX	PLANT NO.	DRAWING NUMBER	SHEET NO. SHT	SHEET NO. CONT.	REV. NO.
-	C421	CD-322927	L04	L05	00

NG/D2-0 (2012/01)

DMS VECTOR NGD200

THIS DRAWING AND THE INFORMATION CONTAINED HEREIN ARE THE SOLE PROPERTY OF National Grid SA NO REPRODUCTION IN FULL OR IN PART SHALL BE OBTAINED FROM THIS DOCUMENT WITHOUT THE WRITTEN CONSENT OF ITS OWNER.

LABEL REF.	LABEL ENGRAVING	MATERIALS	ENGRAVING	LABEL SIZE	LETTER SIZE
U05.5001	U05.5001 87T-2	TRAFOLITE	BLACK LETTERS ON WHITE BACKGROUND	50X15mm	4mm
U12.5001	U12.5001 TS-1	ALUMINUM PAPER FOIL	BLACK LETTERS	50X10mm	3mm
U12.5002	U12.5002 TS-2	ALUMINUM PAPER FOIL	BLACK LETTERS	50X10mm	3mm
U12.5003	U12.5003 TS-3	ALUMINUM PAPER FOIL	BLACK LETTERS	50X10mm	3mm
U12.5004	U12.5004 TS-4	ALUMINUM PAPER FOIL	BLACK LETTERS	50X10mm	3mm
U16.5001	U16.5001 S86T2	TRAFOLITE	BLACK LETTERS ON WHITE BACKGROUND	50X15mm	4mm
U20.101	U20.101 TS-4	ALUMINUM PAPER FOIL	BLACK LETTERS	50X10mm	3mm
U24.5001	U29.5001 86T2	ALUMINUM PAPER FOIL	BLACK LETTERS	50X10mm	3mm
U24.5002	U29.5002 94T2	ALUMINUM PAPER FOIL	BLACK LETTERS	50X10mm	3mm
U28.101	U28.101 23X 63OL-1X	ALUMINUM PAPER FOIL	BLACK LETTERS	50X10mm	3mm
U28.107	U28.107 63OH-1X 63OL-2X	ALUMINUM PAPER FOIL	BLACK LETTERS	50X10mm	3mm
U28.301	U28.301 63OH-2X 96D-1X	ALUMINUM PAPER FOIL	BLACK LETTERS	50X10mm	3mm
U28.307	U28.307 96D-2X 96-1X	ALUMINUM PAPER FOIL	BLACK LETTERS	50X10mm	3mm
U28.113	U28.113 63OP-1X 63OD-1X	ALUMINUM PAPER FOIL	BLACK LETTERS	50X10mm	3mm
U28.313	U28.313 26D-1X 26D-2X	ALUMINUM PAPER FOIL	BLACK LETTERS	50X10mm	3mm
U28.119	U28.119 49W1-5X 49W1-6X	ALUMINUM PAPER FOIL	BLACK LETTERS	50X10mm	3mm
U28.319	U28.319 63D-5X 96-2X	ALUMINUM PAPER FOIL	BLACK LETTERS	50X10mm	3mm
U28.125	U28.125 63OP-2X 49W2-5X	ALUMINUM PAPER FOIL	BLACK LETTERS	50X10mm	3mm
U28.325	U28.325 49W2-6X SPARE	ALUMINUM PAPER FOIL	BLACK LETTERS	50X10mm	3mm
U28.131	U28.131 74R2	ALUMINUM PAPER FOIL	BLACK LETTERS	50X10mm	3mm
U28.331	U28.331 74R3	ALUMINUM PAPER FOIL	BLACK LETTERS	50X10mm	3mm
U28.137	U28.137 63/49/96X	ALUMINUM PAPER FOIL	BLACK LETTERS	50X10mm	3mm
U28.337	U28.337 T1	ALUMINUM PAPER FOIL	BLACK LETTERS	50X10mm	3mm
U28.149	U28.149 49X	ALUMINUM PAPER FOIL	BLACK LETTERS	50X10mm	3mm
U28.349	U28.349 96-3/96-4	ALUMINUM PAPER FOIL	BLACK LETTERS	50X10mm	3mm
U28.143	U28.143 R1	ALUMINUM PAPER FOIL	BLACK LETTERS	50X10mm	3mm
U28.343	U28.343 R2	ALUMINUM PAPER FOIL	BLACK LETTERS	50X10mm	3mm

AS-BUILT BY _____ DATE _____ | CONTRACT NO. 11131113/00 | JOB ORDER NO. S-13656

REV. NO.	DATE	DESCRIPTION
00	13 04	FOR APPROVAL

DRAWN BY RIZ CHECKED BY JKR
DATE STARTED 24.01.2013 DATE COMPLETED _____
ORGG. DEPT. CTPD ENG. DEPT. AUT-PSAC

LIST OF APPARATUS
132/13.8kV GT-1 RELAY PANEL-2 +R05.2
S/S 8709-132/13.8KV IN AL-KHARJ CITY
RIYADH SAUDI ARABIA

الشركة الوطنية لنقل الكهرباء
نقل الكهرباء
National Grid SA

INDEX	PLANT NO.	DRAWING NUMBER	SHEET NO. SHT	SHEET NO. CONT.	REV. NO.
-	C421	CD-322927	L05	L06	00

NG/D2-0 (2012/01)
DMS VECTOR NGD200

THIS DRAWING AND THE INFORMATION CONTAINED HEREIN ARE THE SOLE PROPERTY OF National Grid SA NO REPRODUCTION IN FULL OR IN PART SHALL BE OBTAINED FROM THIS DOCUMENT WITHOUT THE WRITTEN CONSENT OF ITS OWNER.

LABEL REF.	LABEL ENGRAVING	MATERIALS	ENGRAVING	LABEL SIZE	LETTER SIZE
C1	C1 127V AC SUPPLY MCB	TRAFOLITE	BLACK LETTERS ON WHITE BACKGROUND	50X15mm	4mm
C2	C2 220V AC SUPPLY MCB	TRAFOLITE	BLACK LETTERS ON WHITE BACKGROUND	50X15mm	4mm
C3	C3 THERMOSTAT	TRAFOLITE	BLACK LETTERS ON WHITE BACKGRDUND	50X15mm	4mm
C7	C7 ON/OFF SWITCH	TRAFOLITE	BLACK LETTERS ON WHITE BACKGROUND	50X15mm	4mm
DS	DS DODR SWITCH	TRAFOLITE	BLACK LETTERS ON WHITE BACKGROUND	50X15mm	4mm
IL	IL ILLUMINATION LAMP	TRAFOLITE	BLACK LETTERS ON WHITE BACKGROUND	50X15mm	4mm
SH	SH SPACE HEATER	TRAFDLITE	BLACK LETTERS ON WHITE BACKGROUND	50X15mm	4mm
U39.5001	Q1 R2+SUPPLY	TRAFDLITE	BLACK LETTERS ON WHITE BACKGROUND	50X15mm	4mm
U39.5002	Q2 R3+SUPPLY	TRAFOLITE	BLACK LETTERS ON WHITE BACKGROUND	50X15mm	4mm
U39.5003	C01,C02 DUTLET	TRAFOLITE	BLACK LETTERS ON WHITE BACKGROUND	50X15mm	4mm
U39.5004	TJ TELEPHONE JACK	TRAFOLITE	BLACK LETTERS ON WHITE BACKGROUND	50X15mm	4mm
U36.5001	Q3 TC-2+SUPPLY	TRAFDLITE	BLACK LETTERS ON WHITE BACKGROUND	50X15mm	4mm

AS-BUILT BY _____ DATE _____

CONTRACT NO. 11131113/00

JOB ORDER NO. S-13656

REV. NO.	DATE	DESCRIPTION
00	13 04	FOR APPROVAL

DRAWN BY RIZ CHECKED BY JKR

DATE STARTED 24.01.2013 DATE COMPLETED _____

OPRG. DEPT. CTPD ENG. DEPT. AUT-PSAC

LIST OF APPARATUS

132/13.8kV GT-1 RELAY PANEL-2 +R05.2

S/S 8709-132/13.8KV IN AL-KHARJ CITY

RIYADH SAUDI ARABIA

الشركة الوطنية لنقل الكهرباء

نقل الكهرباء
National Grid SA

INDEX	PLANT NO.	DRAWING NUMBER	SHEET NO. SHT	SHEET NO. CONT.	REV. NO.
-	C421	CD-322927	L06	000	00

NG/D2-0 (2012/01)

DMS VECTOR NGD200

THIS DRAWING AND THE INFORMATION CONTAINED HEREIN ARE THE SOLE PROPERTY OF National Grid SA NO REPRODUCTION IN FULL OR IN PART SHALL BE OBTAINED FROM THIS DOCUMENT WITHOUT THE WRITTEN CONSENT OF ITS OWNER.

POWER SYSTEMS NETWORK MANAGEMENT
PROTECTION AND SUBSTATION AUTOMATION SYSTEMS
WBS NO: S-13656

ABB AUTOMATION COMPANY LTD.,
414, AL-KHARJ ROAD
SECOND INDUSTRIAL CITY
RIYADH-11383 K.S.A

CONTRACTOR : ABB Contracting Company

CLIENT : National Grid SA

PROJECT : CONSTRUCTION OF NEW 132/13.8kV SS 8709 IN AL-KHARJ CITY

SUBSTATION : S/S 8709

CONTRACT NO. : 11131113/00

TITLE : SCHEMATICS DRAWINGS (+R05.1,+R05.2)

REV. NO.	DATE	DESCRIPTION
00	13 04	FOR APPROVAL

AS-BUILT BY _____ DATE _____ | CONTRACT NO. 11131113/00 | JOB ORDER NO. S-13656

DRAWN BY RIZ CHECKED BY JKR
DATE STARTED 24.01.2013 DATE COMPLETED _____
DPRG. DEPT. CTPD ENG. DEPT. AUT-PSAC

COVER SHEET
132/13.8KV GT-1 RELAY PANEL-+R05.1/+R05.2
S/S 8709-132/13.8KV IN AL-KHARJ CITY
RIYADH SAUDI ARABIA

الشركة الوطنية لنقل الكهرباء
نقل الكهرباء
National Grid SA

INDEX	PLANT NO.	DRAWING NUMBER	SHEET NO. SHT	SHEET NO. CONT.	REV. NO.
-	C421	CD-322928	000	001	00

NG/D2-0 (2012/01)
DMS VECTOR NGD200

THIS DRAWING AND THE INFORMATION CONTAINED HEREIN ARE THE SOLE PROPERTY OF National Grid SA NO REPRODUCTION IN FULL OR IN PART SHALL BE OBTAINED FROM THIS DOCUMENT WITHOUT THE WRITTEN CONSENT OF ITS OWNER.

CONTENTS	ABB SHT.NO.	REV.00	REV.01	REV.02
COVER SHEET	000	X		
CONTENTS SHEET	001	X		
CONTENTS SHEET	002	X		
GRAPHICAL SYMBOLS FOR DIAGRAMS	011	X		
GRAPHICAL SYMBOLS FOR DIAGRAMS	012	X		
COMMON LEGEND	013	X		
FERULE AND WIRING DETAILS	014	X		
PRIMARY SYSTEM	051-055	X		
AC SUPPLY FOR ILLUMINATION & POWER SOCKET	211	X		
CUB. LIGHTING, HEATER & SOCKET ALARM CKT.	212	X		
DC SUPPLY DISTRIBUTION	216	X		
CT CIRCUITS	221-223	X		
VT CIRCUITS	224	X		
87T-1 BINARY INPUTS	227	X		
87T-1 BINARY INPUTS	228	X		
MAIN-1 TRAF DIFFL. PROTECTION TRIP RELAY CKT.	232	X		
CBF & BUSBAR-1 TRIP RELAY CIRCUIT	276	X		
BUSBAR-2 TRIP RELAY CIRCUIT	277	X		
TRIP COIL-1 SUPERVISION CIRCUIT	291	X		
CLOSE BLOCK & BF INI CKT.	292	X		
CONTACTS FOR ACSE INI & LV TRIPPING TC	293	X		
ACSE INI & LV CLOSE BLOCK CIRCUIT	294	X		
CONTACTS FOR TRIP CIRCUIT-2 & BFI	295	X		

CONTENTS	ABB SHT.NO.	REV.00	REV.01	REV.02
CONTACTS FOR U/F LOAD SHEDDING	296	X		
STN COMMON ALARM CIRCUITS	298	X		
LOR SPARE CONTACTS	299	X		
BLOCK REFERENCE	301-303	X		
TERMINAL BLOCK REFERENCE +R05.1	304	X		

REV. NO.	DATE	DESCRIPTION
00	13 04	FOR APPROVAL

AS-BUILT BY _____ DATE _____

CONTRACT NO. 11131113/00 JOB ORDER NO. S-13656

DRAWN BY RIZ CHECKED BY JKR

DATE STARTED 24.01.2013 DATE COMPLETED _____

DPRG. DEPT. CTPD ENG. DEPT. AUT-PSAC

CONTENTS SHEET

132/13.8KV GT-1 RELAY PANEL-1/2

S/S 8709-132/13.8KV IN AL-KHARJ CITY

RIYADH SAUDI ARABIA

الشركة الوطنية لنقل الكهرباء

نقل الكهرباء National Grid SA

INDEX	PLANT NO.	DRAWING NUMBER	SHEET NO. SHT	SHEET NO. CONT.	REV. NO.
-	C421	CD-322928	001	002	00

NG/D2-0 (2012/01)

DMS VECTOR NGD200

THIS DRAWING AND THE INFORMATION CONTAINED HEREIN ARE THE SOLE PROPERTY OF National Grid SA NO REPRODUCTION IN FULL OR IN PART SHALL BE OBTAINED FROM THIS DOCUMENT WITHOUT THE WRITTEN CONSENT OF ITS OWNER.

CONTENTS	ABB SHT.NO.	REV.00	REV.01	REV.02
AC SUPPLY FOR ILLUMINATION & POWER SOCKET	411	X		
CUB. LIGHTING, HEATER & SOCKET ALARM CKT.	412	X		
DC SUPPLY DISTRIBUTION FOR SYSTEM SYNCHRONISER	416	X		
CT CIRCUIT 87T-2 RELAY	421-422	X		
CT CIRCUIT 87T-2 RELAY	423	X		
CT & VT CIRCUITS 87T-2 RELAY	424	X		
87T-2 BINARY INPUTS	429	X		
87T-2 BINARY INPUTS	430	X		
MAIN-2 OIFF. PROTECTION TRIP RELAY CKT.	432	X		
TRANS.MECH.PROTN.CONTACT MULTI.CKT	433	X		
TRANS.MECH.PROTN.CONTACT MULTI.CKT	434	X		
TRANS.MECH.PROTN.CONTACT MULTI.CKT	435	X		
TRANS.MECH.PROTN.CONTACT MULTI.CKT	436	X		
CB K30S TRIP CIRCUIT-2 SUPERVISION CIRCUIT	491	X		
BF INI & CLOSE BLOCK CIRCUIT	492	X		
TRANSFORMER MECHANICAL.PROTN.	493	X		
CONTACTS FOR TRIP ANO CLOSE BLOCK	494	X		
CONTACTS FOR U/F LOAD SHEDDING	496	X		
MECH PROTN ALARM CIRCUIT	498	X		
STN COMMON ALARM CIRCUIT	499	X		
BLOCK REFERENCE	S01	X		
BLOCK REFERENCE	502	X		
TERMINAL BLOCKS REFERENCE +R0S.2	S06	X		
TERMINAL BLOCKS REFERENCE +R05.2	507	X		

AS-BUILT BY _____ DATE _____ | CONTRACT NO. 11131113/00 | JOB ORDER NO. S-13656

REV. NO.	DATE	DESCRIPTION
00	13 04	FOR APPROVAL

DRAWN BY RIZ CHECKED BY JKR
DATE STARTED 24.01.2013 DATE COMPLETED _____
OPRG. DEPT. CTPD ENG. DEPT. AUT-PSAC

CONTENTS SHEET
132/13.8KV GT-1 RELAY PANEL-1/2
S/S 8709-132/13.8KV IN AL-KHARJ CITY
RIYADH SAUDI ARABIA

الشركة الوطنية لنقل الكهرباء
نقل الكهرباء
National Grid SA

INDEX	PLANT NO.	DRAWING NUMBER	SHEET NO. SHT	SHEET NO. CONT.	REV. NO.
-	C421	CD-322928	002	011	00

NG/D2-0 (2012/01)
DMS VECTOR NGD200

THIS DRAWING AND THE INFORMATION CONTAINED HEREIN ARE THE SOLE PROPERTY OF National Grid SA NO REPRODUCTION IN FULL OR IN PART SHALL BE OBTAINED FROM THIS DOCUMENT WITHOUT THE WRITTEN CONSENT OF ITS OWNER.

SYMBOL	DESCRIPTION
	FRAME CONNECTION
	EARTH CONNECTION
	RESISTOR
	VARIABLE RESISTOR
	RESISTOR WITH PRESET ADJUSTMENT
	CAPACITOR
	SEMICONDUCTOR DIODE USED AS A CAPACITIVE DEVICE
	OPEN CONTACT, MAKE CONTACT
	CLOSED CONTACT, BREAK CONTACT
	CHANGE-OVER CONTACT, BREAK BEFORE MAKE
	MAKE CONTACT WHICH IS EARLY WHEN OPERATING AND LATE WHEN RELEASING
	BREAK CONTACT WHICH IS LATE WHEN OPERATING AND EARLY WHEN RELEASING
	SWITCHING DEVICE WITH MANUAL CONTROL
	MAKE CONTACT DELAYED WHEN OPERATING
	BREAK CONTACT DELAYED WHEN RELEASING
	MAKE CONTACT DELAYED WHEN OPERATING AND RELEASING
	MAIN CONTACT OF A SWITCH DISCONNECTOR
	MAIN CONTACT OF A DISCONNECTOR

SYMBOL	DESCRIPTION
	MAIN CONTACT OF A CIRCUIT BREAKER
	PASSING MAKE CONTACT CLOSING MOMENTARILY DURING OPERATION AND RELEASE
	BREAK CONTACT DELAYED WHEN OPERATING
	MAKE CONTACT DELAYED WHEN RELEASING
	TWO MECHANICAL LINKS CROSSING WITHOUT CONNECTION
	JUNCTION OF MECHANICAL LINKS
	AUTOMATIC RESET
	NON-AUTOMATIC RESET
	SWITCHING DEVICE WITH MANUAL OPERATION AND WITH AUTOMATIC RESET
	SWITCHING DEVICE WITH MANUAL OPERATION AND WITH NON-AUTOMATIC RESET
	CHANGE-OVER SWITCHING DEVICE WITH MANUAL CONTROL AUTOMATIC RESET FROM POSITION 1-2 TO THE NEUTRAL POSITION
	RELAY WITH MAKE CONTACT
	RELAY WITH CHANGE-OVER CONTACT
	RELAY WITH MAKE CONTACT, DELAYED WHEN OPERATING
	RELAY WITH MAKE CONTACT, DELAYED WHEN RELEASING
	RELAY WITH MAKE CONTACT, DELAYED WHEN OPERATING AND RELEASING

SYMBOL	DESCRIPTION
	RELAY WITH TWO MAKE CONTACTS, ONE OF THEM DELAYED WHEN OPERATING
	RELAY WITH TWO ACTUATORS AND A TWO STABLE POSITIONS
	SIGNALLING LAMP
	MECHANICAL INDICATOR WITH AUTOMATIC RESET
	MECHANICAL INDICATOR WITH NON-AUTOMATIC RESET
	ELECTRICALLY CONTROLLED MECHANICAL INDICATOR WITH AUTOMATIC RESET
	ELECTRICALLY CONTROLLED MECHANICAL INDICATOR WITH NON-AUTOMATIC RESET
	RELAY WITH MECHANICAL INDICATOR
	ELECTRO-MECHANICAL POSITION INDICATOR WITH ONE DE-ENERGIZED AND ONE OPERATED POSITION
	ELECTRO-MECHANICAL POSITION INDICATOR WITH ONE DE-ENERGIZED AND TWO OPERATED POSITION
	BELL, BUZZER
	SIREN , HORN

AS-BUILT BY _____ DATE _____ | CONTRACT NO. 11131113/00 | JOB ORDER NO. S-13656

REV. NO.	DATE	DESCRIPTION
00	13 04	FOR APPROVAL

DRAWN BY RIZ CHECKED BY JKR
DATE STARTED 24.01.2013 DATE COMPLETED _____
DRG. DEPT. CTPD ENG. DEPT. AUT-PSAC

GRAPHICAL SYMBOLS FOR DIAGRAMS
132/13.8KV GT-1 RELAY PANEL-1/2
S/S 8709-132/13.8KV IN AL-KHARJ CITY
RIYADH SAUDI ARABIA

الشركة الوطنية لنقل الكهرباء
نقل الكهرباء
National Grid SA

INDEX	PLANT NO.	DRAWING NUMBER	SHEET NO. SHT	SHEET NO. CONT.	REV. NO.
-	C421	CD-322928	011	012	00

NG/D2-D (2012/01)
DMS VECTOR NGD200

THIS DRAWING AND THE INFORMATION CONTAINED HEREIN ARE THE SOLE PROPERTY OF National Grid SA NO REPRODUCTION IN FULL OR IN PART SHALL BE OBTAINED FROM THIS DOCUMENT WITHOUT THE WRITTEN CONSENT OF ITS OWNER.

SYMBOL	DESCRIPTION	SYMBOL	DESCRIPTION	SYMBOL	DESCRIPTION
	FUSE / LINK	W	WATTMETER		ELEMENT WITH NEGATED INHIBITING INPUT
	FUSE WITH THE SUPPLY SIDE INDICATED	Var	VARMETER		ELEMENT WITH INPUT WHICH DOES NOT CARRY ANY LOGIC INFORMATION
	SINGLE-PHASE TRANSFORMER WITH TWO SEPARATE WINDINGS (TWO ALTERNATIVE FORMS)	PF	POWER FACTOR METER	X|	ELEMENT WITH POSTPONED OUTPUT
	SINGLE-PHASE TRANSFORMER WITH THREE SEPARATE WINDINGS (TWO ALTERNATIVE FORMS)		POSITION INDICATOR	&	AND-ELEMENT WITH TWO INPUTS
	SINGLE-PHASE TRANSFORMER WITH FERRO MAGNETIC CORE		SYNCHROSCOPE	≥1	OR-ELEMENT WITH TWO INPUTS
	SINGLE-PHASE VOLTAGE TRANSFORMER (MULTI-LINE AND SINGLE-LINE REPRESENTATION)	V	RECORDING VOLTMETER	≥2	LOGIC THRESHOLD ELEMENT WITH FOUR INPUTS AND THRESHOLD VALUE 2
	SINGLE-PHASE VOLTAGE TRANSFORMER WITH TWO SECONDARY WINDINGS (MULTI-LINE AND SINGLE-LINE REPRESENTATION)	W	RECORDING WATTMETER	=2	ELEMENT WITH THREE INPUTS FOR "2 AND ONLY 2"
	CURRENT TRANSFORMER (MULTI-LINE AND SINGLE-LINE REPRESENTATION)	h	HOUR METER	=1	EXCLUSIVE OR-ELEMENT WITH THREE INPUTS
	CURRENT TRANSFORMER WITH TWO CORES (MULIT-LINE AND SINGLE-LINE REPRESENTATION)	Wh	WATT-HOUR METER	=	LOGIC IDENTITY ELEMENT WITH THREE INPUTS
	CURRENT TRANSFORMER WITH TWO SECONDARY WINDINGS ON ONE CORE (MULTI-LINE AND SINGLE-LINE REPRESENTATION)	Wh	WATT-HOUR METER FOR ENERGY FROM A BUSBAR SYSTEM	>n/2	MAJORITY ELEMENT WITH THREE INPUTS
~	FILTER		ELEMENT WITH STATIC INPUT	1	NEGATOR
	HIGH-PASS FILTER		ELEMENT WITH STATIC NEGATED INPUT	&	NAND ELEMENT WITH TWO INPUTS
	BAND-PASS FILTER		ELEMENT WITH STATIC NEGATED OUTPUT	>1	NOR ELEMENT WITH TWO INPUTS
V	VOLTMETER		ELEMENT WITH DYNAMIC INPUT	X Y	BISTABLE ELEMENT
A	AMMETER		ELEMENT WITH DYNAMIC NEGATED INPUT		
			ELEMENT WITH INHIBITING INPUT		

REV. NO.	DATE	DESCRIPTION
00	13 04	FOR APPROVAL

AS-BUILT BY _____ DATE _____ | CONTRACT NO. 11131113/00 | JOB ORDER NO. S-13656

DRAWN BY RIZ CHECKED BY JKR

DATE STARTED 24.01.2013 DATE COMPLETED _____

DPRG. DEPT. CTPD ENG. DEPT. AUT-PSAC

GRAPHICAL SYMBOLS FOR DIAGRAMS

132/13.8KV GT-1 RELAY PANEL-1/2

S/S 8709-132/13.8KV IN AL-KHARJ CITY

RIYADH SAUDI ARABIA

الشركة الوطنية لنقل الكهرباء

نقل الكهرباء National Grid SA

INDEX	PLANT NO.	DRAWING NUMBER	SHEET NO. SHT	SHEET NO. CONT.	REV. NO.
-	C421	CD-322928	012	013	00

NG/D2-0 (2012/01)

DMS | VECTOR | NGD200

THIS DRAWING AND THE INFORMATION CONTAINED HEREIN ARE THE SOLE PROPERTY OF National Grid SA NO REPRODUCTION IN FULL OR IN PART SHALL BE OBTAINED FROM THIS DOCUMENT WITHOUT THE WRITTEN CONSENT OF ITS OWNER.

LEGENDS

±R1	DC SUPPLY - MAIN PRDTECTIDN
±R2	DC SUPPLY - SECONDARY PRDTECTION
±R3	DC SUPPLY - BACK UP PRDTECTIDN
±IT	DC SUPPLY - INTER TRIP
FL	DC SUPPLY - FLASHING CIRCUIT
BB RS±	DC SUPPLY - BUS BAR - PRDTECTIDN RESET
BB CBF±/CBF±	DC SUPPLY - CBF PROTECTION
R	RESET BUS - ALARM SYSTEM
CR	CDNTRDL RDDM
ECC	ENERGY CONTROL CENTRE
LDCAL	THE LDCATIDN DF CDNTRDLLED DEVICE
REMDTE	ANY OTHER LOCATION NOT LOCAL
DN	CB NDRMALLY DPEN AUXILIARY CDNTACT
OFF	CB NORMALLY CLOSED AUXILIARY CONTACT
A	CDMMDN
T	TEST POSITIDN
S	SERVICE PDSITIDN
CS	CLDSE IN SERVICE PDSITION
CT	CLDSE IN TEST PDSITIDN
LS	LDCAL SERVICE
LT	LDCAL TEST
LC	LOCAL CLOSE
LD	LDCAL DPEN
RO	REMOTE DPEN
DP	DPERATE
RE	RESET

NOTES

LABELS

WHITE LABEL WITH BLACK LETTERING WILL BE PROVIDED FOR ALL MDUNTED APPARATUS EDUIPMENT IDENTIFICATIDN AND FUNCTIDN REFERENCE LABEL WILL BE PRDVIDED FDR FRDNT MDUNTED EDUIPMENTS DF THE PANEL AND EDUIPMENT IDENTIFICATIDN LABEL WILL BE PROVIDED FOR INTERNALLY MOUNTED EOUIPMENTS

WIRING

PVC INSULATED 600V GRADE
2.5 SO.mm. YELLOW COLOURED FOR CT CIRCUITS
2.5 SD.mm. RE CDLDURED FDR VT CIRCUITS
1.5 SO.mm. GREY COLOURED FOR DC SUPPLY, SCADA AND CONTROL CIRCUITS
2.5 SO.mm. BLACK COLOURED FOR AVC AND AC CIRCUITS
2.5 SD.mm. YELLOW/GREEN COLOURED FOR EARTHING CONNECTIONS
FOLLOWING MARKERS SHALL BE PROVIDED ON FOLLOWING WIRES:
+ SIGN FOR DC + WIRE
- SIGN FOR DC - WIRE

LUGS

A. CT CIRCUITS- RING TYPE
B. DTHER CIRCUITS - SPADE TYPE

FERULLING

YELLD TUBE 3.2 mm FDR 1.5SD mm WIRES AND 4.2 FDR 2.5 SD mm WIRES
(AS PER 31 - TMSS-1, RE.0)

AS-BUILT BY _____ DATE _____ | CONTRACT NO. 11131113/00 | JOB ORDER NO. S-13656

REV. NO.	DATE	DESCRIPTION
00	13 04	FOR APPROVAL

DRAWN BY RIZ CHECKED BY JKR
DATE STARTED 24.01.2013 DATE COMPLETED _____
DPRG. DEPT. CTPD ENG. DEPT. AUT-PSAC

COMMON LEGEND
132/13.8KV GT-1 RELAY PANEL-1/2
S/S 8709-132/13.8KV IN AL-KHARJ CITY
RIYADH SAUDI ARABIA

الشركة الوطنية لنقل الكهرباء
نقل الكهرباء
National Grid SA

INDEX	PLANT NO.	DRAWING NUMBER	SHEET NO. SHT	SHEET NO. CONT.	REV. NO.
-	C421	CD-322928	013	014	00

NG/D2-0 (2012/01)
DMS VECTOR NGD200

THIS DRAWING AND THE INFORMATION CONTAINED HEREIN ARE THE SOLE PROPERTY OF National Grid SA NO REPRODUCTION IN FULL OR IN PART SHALL BE OBTAINED FROM THIS DOCUMENT WITHOUT THE WRITTEN CONSENT OF ITS OWNER.

FOR 132kV RELAY & CONTROL, PROTN PANELS

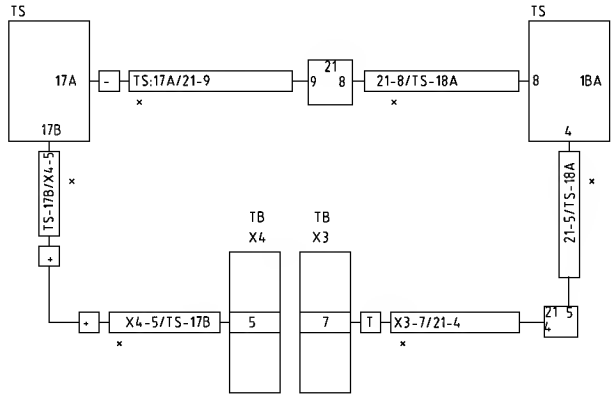

AS PER IEC-391 FIG 14a (W/O SUPPLEMENTARY/IDENTIFICATION MARK)

FOR 132kV PANELS INTERPANEL WIRING

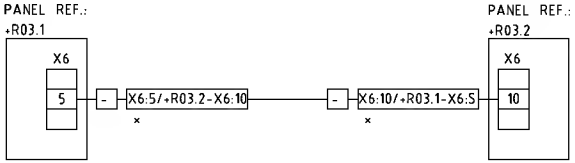

AS PER IEC-391 FIG 14d (W/O SUPPLEMENTARY/IDENTIFICATION MARK)

WIRES - PVC insulated,stranded, coated annealed copper conductor graded for 1000V	a. CT Circuits - 2.5 Sqmm PVC Yellow colour
	b. VT Circuits - 1.5 Sqmm PVC Red colour
	c. DC, & CONTROL Circuits - 1.5 Sqmm PVC Grey colour
	d. Alarm Circuits - 1.0 Sqmm PVC Blue colour
	e. AVC & AC Circuits - 2.5 Sqmm PVC Black colour
	f. Earth Circuits - 2.5 Sqmm PVC Yellow/Green colour
LUGS - Pre-Insulated	a(CT Circuits - Ring type
	b(Other Circuits - Spade type

NOTE:1 ADDITIONAL MARKING AS APPLICABLE

NOTE:2 FERRULE NUMBERING WILL BE BLACK LETTERS ON YELLOW TUBE
3.2 mm for 1.5 sq mm wires and
4.2 mm for 2.5 sq mm wires
(As per 31-TMSS-1, REV 0)

NOTE:3 STARTING POINT OF THE FERRULE LEFT TO RIGHT

REV. NO.	DATE	DESCRIPTION
00	13 04	FOR APPROVAL

AS-BUILT BY _____ DATE _____ CONTRACT NO. 11131113/00 JOB ORDER NO. S-13656

DRAWN BY RIZ CHECKED BY JKR
DATE STARTED 24.01.2013 DATE COMPLETED _____
ORGN. DEPT. CTPD ENG. DEPT. AUT-PSAC

FERRULE AND WIRING DETAILS
132/13.8KV GT-1 RELAY PANEL-1/2
S/S 8709-132/13.8KV IN AL-KHARJ CITY
RIYADH SAUDI ARABIA

الشركة الوطنية لنقل الكهرباء
نقل الكهرباء
National Grid SA

INDEX	PLANT NO.	DRAWING NUMBER	SHEET NO. SHT	SHEET NO. CONT.	REV. NO.
-	C421	CD-322928	014	015	00

NG/D2-0 (2012/01)
DMS VECTOR NGD200

THIS DRAWING AND THE INFORMATION CONTAINED HEREIN ARE THE SOLE PROPERTY OF National Grid SA NO REPRODUCTION IN FULL OR IN PART SHALL BE OBTAINED FROM THIS DOCUMENT WITHOUT THE WRITTEN CONSENT OF ITS OWNER.

MANUFACTURER	SCHEMATICS DWG.NO	PANEL DESCRIPITION	PANEL REFERENCE
ABB PROTECTION & SUBSTATION AUTOMATION		SS B709 132kV RELAY PANELS	
	CD-32292B	132/13.BkV GT-1 RELAY PANEL -1	+R05.1
		132/13.BkV GT-1 RELAY PANEL -2	+R05.2
	CD-322931	132/13.BkV GT-2 RELAY PANEL -1	+R01.1
		132/13.BkV GT-2 RELAY PANEL -2	+R01.2
	CD-322934	132/13.BkV GT-3 RELAY PANEL -1	+R04.1
		132/13.BkV GT-3 RELAY PANEL -2	+R04.2
	CD-322936	132/13.BkV TRANSFORMER-1,2& 3 AVC PANEL	+AVC
	CD-322922	132KV SPARE-1 UGF RELAY PANEL -1	+R07.1
		132KV SPARE-1 UGF RELAY PANEL -2	+R07.2
	CD-322916	132KV B020 UGF RELAY PANEL -1	+R02.1
		132KV B020 UGF RELAY PANEL -2	+R02.2
	CD-322919	132KV B710 UGF RELAY PANEL -1	+R05.1
		132KV B710 UGF RELAY PANEL -2	+R05.2
	CD-322925	132KV SPARE-2 UGF RELAY PANEL -1	+R06.1
		132KV SPARE-2 UGF RELAY PANEL -2	+R06.2
	CD-323012	132KV FOIP PANEL	+FOIP
	CD-322946	132kV BUS COUPLER-A	+R130
	CD-32294B	132kV BUS COUPLER-B	+R230
	CD-322950	132kV BUS SECTION	+R120
	CD-322991	132kV BUSBAR PROTECTION MAIN-1 CENTRAL UNIT PANEL	+BB1-1
	CD-322993	132kV BUSBAR PROTECTION MAIN-1 BAY UNIT PANEL	+BB1-2
	CD-322995	132kV BUSBAR PROTECTION MAIN-1 BAY UNIT PANEL	+BB1-3
	CD-322997	132kV BUSBAR PROTECTION MAIN-1 BAY UNIT PANEL	+BB1-4
	CD-322999	132kV BUSBAR PROTECTION MAIN-1 BAY UNIT PANEL	+BB1-5
	CD-323001	132kV BUSBAR PROTECTION MAIN-2 CENTRAL UNIT PANEL	+BB2-1
	CD-323003	132kV BUSBAR PROTECTION MAIN-2 BAY UNIT PANEL	+BB2-2
	CD-323005	132kV BUSBAR PROTECTION MAIN-2 BAY UNIT PANEL	+BB2-3
	CD-323007	132kV BUSBAR PROTECTION MAIN-2 BAY UNIT PANEL	+BB2-4
	CD-323009	132kV BUSBAR PROTECTION MAIN-2 BAY UNIT PANEL	+BB2-5

AS-BUILT BY _____ DATE _____

REV. NO.	DATE	DESCRIPTION
00	13 04	FOR APPROVAL

CONTRACT NO. 11131113/00

JOB ORDER NO. S-13656

DRAWN BY RIZ CHECKED BY JKR

DATE STARTED 24.01.2013 DATE COMPLETED _____

ORG. DEPT. CTPD ENG. DEPT. AUT-PSAC

DRAWING REFERENCES

132/13.8KV GT-1 RELAY PANEL-1/2

S/S 8709-132/13.8KV IN AL-KHARJ CITY

RIYADH SAUDI ARABIA

الشركة الوطنية لنقل الكهرباء

نقل الكهرباء
National Grid SA

INDEX	PLANT NO.	DRAWING NUMBER	SHEET NO. SHT	SHEET NO. CONT.	REV. NO.
-	C421	CD-322928	015	016	00

NG/D2-D (2012/01)

DMS VECTOR NGD200

THIS DRAWING AND THE INFORMATION CONTAINED HEREIN ARE THE SOLE PROPERTY OF National Grid SA NO REPRODUCTION IN FULL OR IN PART SHALL BE OBTAINED FROM THIS DOCUMENT WITHOUT THE WRITTEN CONSENT OF ITS OWNER.

MANUFACTURER	SCHEMATICS DWG.NO	PANEL DESCRIPITION	PANEL REFERENCE
ABB PROTECTION & SUBSTATION AUTOMATION		SS 8709 13.8KV RELAY PANELS	
	CD-322952	13.8KV Capacitor Bank-1 Protection Panel	+CBP-1
	CD-322954	13.8KV Capacitor Bank-2 Protection Panel	+CBP-2
	CD-322956	13.8KV Capacitor Bank-2 Protection Panel	+CBP-3
	CD-322958	13.8 KV ACCS PANEL	+ACCS
	CD-322962	13.8KV ACSE PANEL	+ACSE
	CD-322968	13.8KV Under Voltage Load Shedding Panel	+UVLS
	CD-322964	13.8KV Under Frequency Load Shedding Panel-1	+UFLS01
	CD-322966	13.8KV Under Frequency Load Shedding Panel-2	+UFLS02

REV. NO.	DATE	DESCRIPTION
00	13 04	FOR APPROVAL

AS-BUILT BY _____ DATE _____

CONTRACT NO. 11131113/00

JOB ORDER NO. S-13656

DRAWN BY RIZ CHECKED BY JKR

DATE STARTED 24.01.2013 DATE COMPLETED _____

OPRG. DEPT. CTPD ENG. DEPT. AUT-PSAC

DRAWING REFERENCES

132/13.8KV GT-1 RELAY PANEL-1/2

S/S 8709-132/13.8KV IN AL-KHARJ CITY

RIYADH SAUDI ARABIA

الشركة الوطنية لنقل الكهرباء

نقل الكهرباء
National Grid SA

INDEX	PLANT NO.	DRAWING NUMBER	SHEET NO. SHT	SHEET NO. CONT.	REV. NO.
-	C421	CD-322928	016	051	00

NG/D2-0 (2012/01)

DMS VECTOR NGD200

THIS DRAWING AND THE INFORMATION CONTAINED HEREIN ARE THE SOLE PROPERTY OF National Grid SA NO REPRODUCTION IN FULL OR IN PART SHALL BE OBTAINED FROM THIS DOCUMENT WITHOUT THE WRITTEN CONSENT OF ITS OWNER.

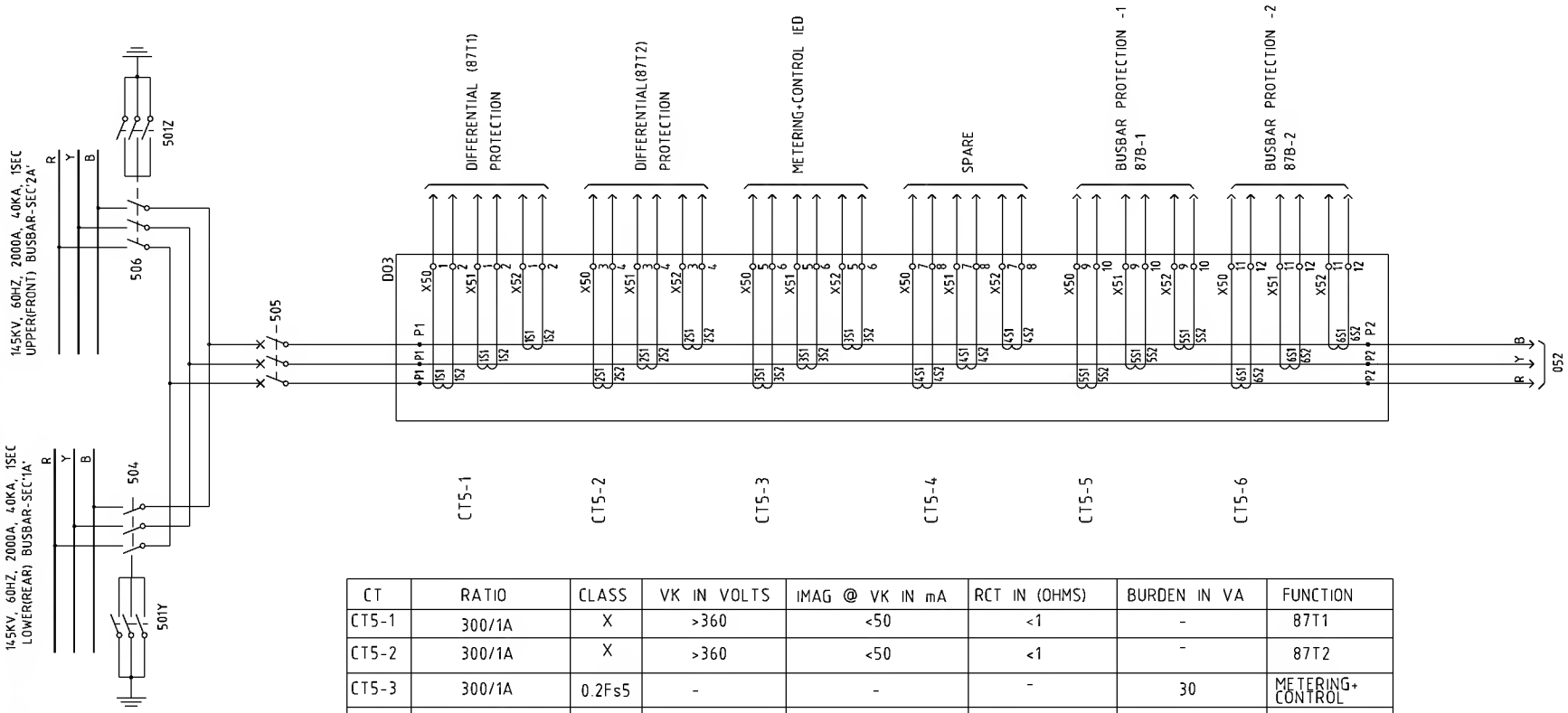

CT	RATIO	CLASS	VK IN VOLTS	IMAG @ VK IN mA	RCT IN (OHMS)	BURDEN IN VA	FUNCTION
CT5-1	300/1A	X	>360	<50	<1	-	87T1
CT5-2	300/1A	X	>360	<50	<1	-	87T2
CT5-3	300/1A	0.2Fs5	-	-	-	30	METERING+ CONTROL
CT5-4	300/1A	5P20	-	-	-	30	SPARE
CT5-5	2000/1A	X	>600	<25	<5	-	87B MAIN-1
CT5-6	2000/1A	X	>600	<25	<5	-	87B MAIN-2

AS-BUILT BY _____ DATE _____ | CONTRACT NO. 11131113/00 | JOB ORDER NO. S-13656

REV. NO.	DATE	DESCRIPTION
00	13 04	FOR APPROVAL

DRAWN BY RIZ CHECKED BY JKR
DATE STARTED 24.01.2013 DATE COMPLETED _____
ORG. DEPT. CTPD ENG. DEPT. AUT-PSAC

PRIMARY SYSTEM (GT-1)
132/13.8KV GT-1 RELAY PANEL-1/2
S/S 8709-132/13.8KV IN AL-KHARJ CITY
RIYADH SAUDI ARABIA

الشركة الوطنية لنقل الكهرباء
نقل الكهرباء
National Grid SA

INDEX	PLANT NO.	DRAWING NUMBER	SHEET NO. SHT	SHEET NO. CONT.	REV. NO.
-	C421	CD-322928	051	052	00

NG/D2-0 (2012/01)
DMS VECTOR NGD200

THIS DRAWING AND THE INFORMATION CONTAINED HEREIN ARE THE SOLE PROPERTY OF National Grid SA NO REPRODUCTION IN FULL OR IN PART SHALL BE OBTAINED FROM THIS DOCUMENT WITHOUT THE WRITTEN CONSENT OF ITS OWNER.

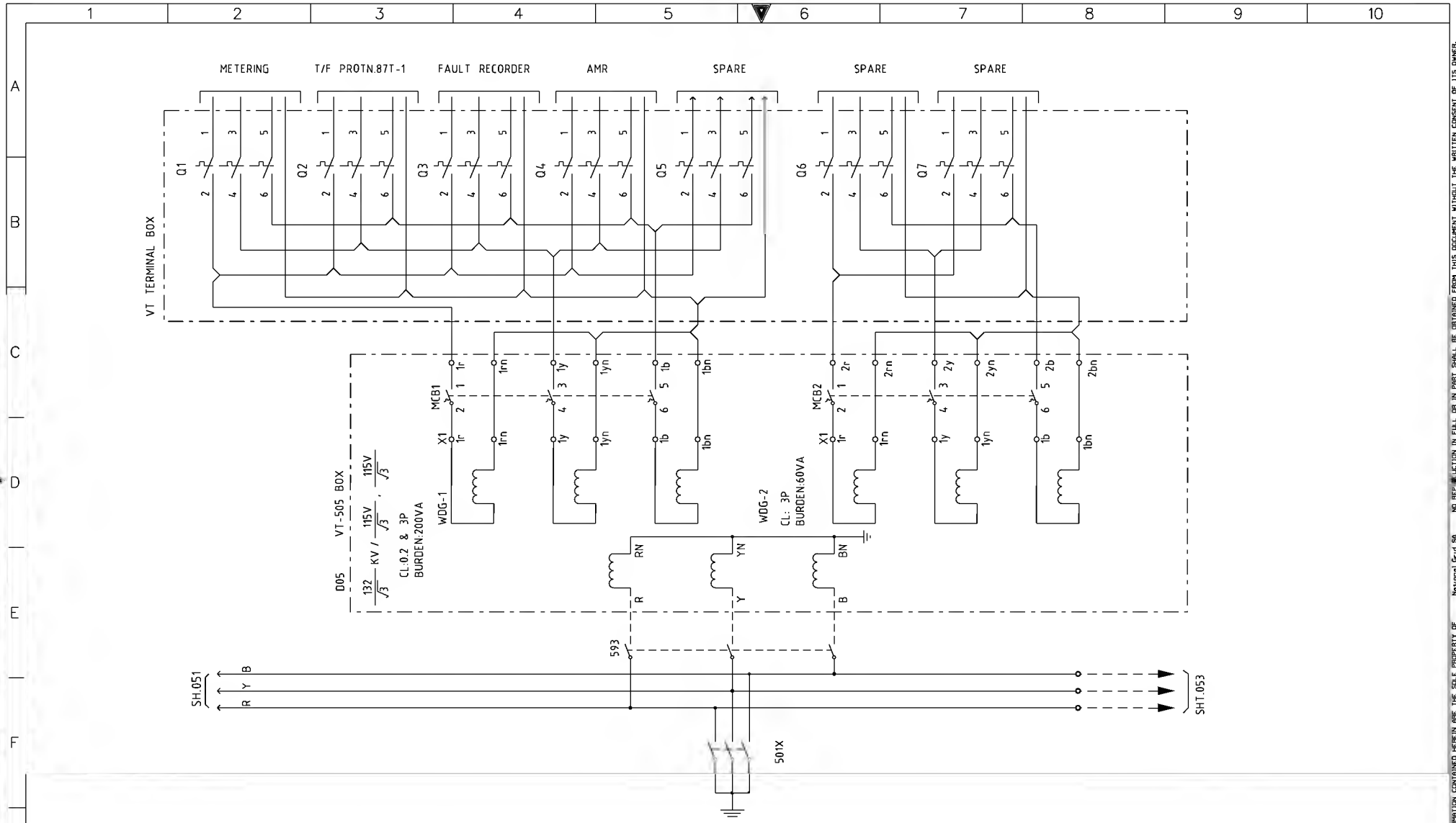

AS-BUILT BY _____ DATE _____	CONTRACT NO. 11131113/00	JOB ORDER NO. S-13656
	DRAWN BY RIZ	CHECKED BY JKR
	DATE STARTED 24.01.2013	DATE COMPLETED
	OPRG. DEPT. CTPD	ENG. DEPT. AUT-PSAC

REV. NO.	DATE	DESCRIPTION
00	13 04	FOR APPROVAL

PRIMARY SYSTEM (GT-1)

132/13.8KV GT-1 RELAY PANEL-1/2

S/S 8709-132/13.8KV IN AL-KHARJ CITY

RIYADH SAUDI ARABIA

الشركة الوطنية لنقل الكهرباء

نقل الكهرباء
National Grid SA

INDEX	PLANT NO.	DRAWING NUMBER	SHEET NO. SHT	SHEET NO. CONT.	REV. NO.
-	C421	CD-322928	052	053	00

NG/D2-D (2012/01)

DMS | VECTOR | NGD200

THIS DRAWING AND THE INFORMATION CONTAINED HEREIN ARE THE SOLE PROPERTY OF National Grid SA NO REPRODUCTION IN FULL OR IN PART SHALL BE OBTAINED FROM THIS DOCUMENT WITHOUT THE WRITTEN CONSENT OF ITS OWNER.

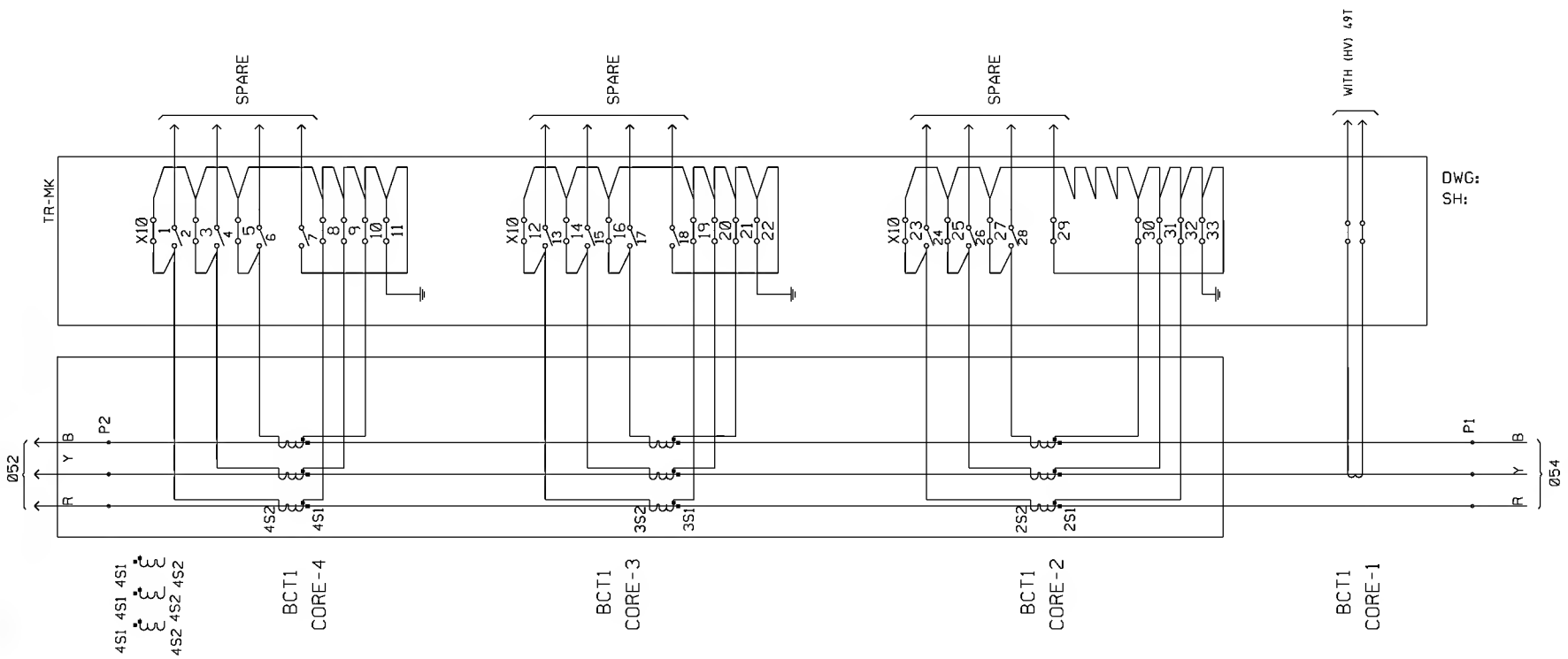

CT	RATIO	CLASS	VK IN VOLTS	IMAG @ VK IN mA	RCT IN (OHMS)	BURDEN IN VA	FUNCTION
BCT1-4	300/1A	X	>360V	<50	<1	-	SPARE
BCT1-3	300/1A	10P10	-	-	-	30	SPARE
BCT1-2	1200-B00/1A	X	>1400	<25MA	<2	-	SPARE
BCT1-1 (YPH)ONLY	323/2A	3Fs10	-	-	-	10	WTI(HV)-49T

AS-BUILT BY _____ DATE _____ | CONTRACT NO. 11131113/00 | JOB ORDER NO. S-13656

REV. NO.	DATE	DESCRIPTION
00	13 04	FOR APPROVAL

DRAWN BY RIZ CHECKED BY JKR
DATE STARTED 24.01.2013 DATE COMPLETED _____
DPRG. DEPT. CTPD ENG. DEPT. AUT-PSAC

PRIMARY SYSTEM (GT-1)
132/13.8KV GT-1 RELAY PANEL-1/2
S/S 8709-132/13.8KV IN AL-KHARJ CITY
RIYADH SAUDI ARABIA

الشركة الوطنية لنقل الكهرباء
نقل الكهرباء
National Grid SA

INDEX	PLANT NO.	DRAWING NUMBER	SHEET NO. SHT	SHEET NO. CONT.	REV. NO.
-	C421	CD-322928	053	054	00

NG/D2-0 (2012/01)
DMS VECTOR NGD200

THIS DRAWING AND THE INFORMATION CONTAINED HEREIN ARE THE SOLE PROPERTY OF National Grid SA NO REPRODUCTION IN FULL OR IN PART SHALL BE OBTAINED FROM THIS DOCUMENT WITHOUT THE WRITTEN CONSENT OF ITS OWNER.

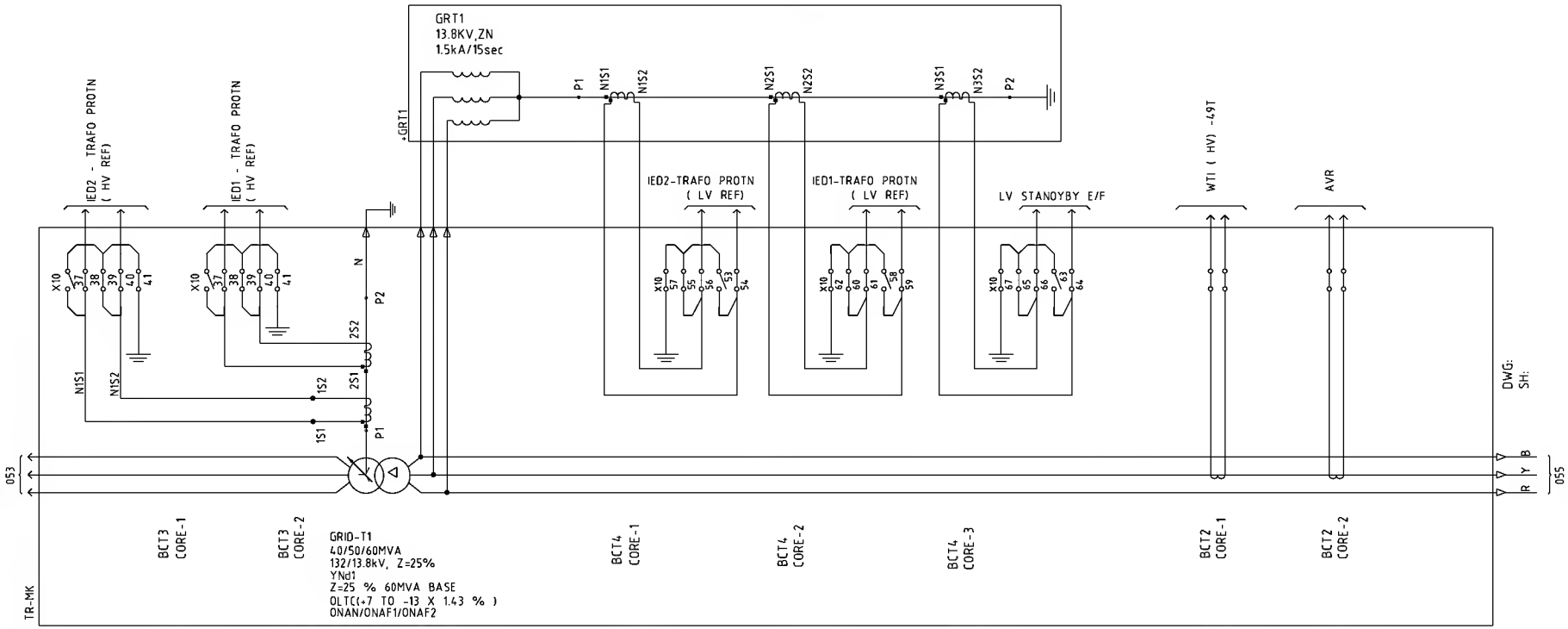

CT	RATIO	CLASS	VK IN VOLTS	IMAG @ VK IN mA	RCT IN (OHMS)	BURDEN IN VA	FUNCTION
BCT2-1 (YPH)ONLY	2510/2A	3Fs10	-	-	-	10	WTI(LV)-49T
BCT2-2 (YPH)ONLY	2510/5A	0.5	-	-	-	50	AVR
BCT3-1	300/1A	X	>360	<50MA	≤1	-	IED2-TRAFO PROTN(HV REF)
BCT3-2	300/1A	X	>360	<50MA	≤1	-	IED1-TRAFO PROTN(HV REF)
BCT4-1	3000/1A	X	>765	<25MA	≤10	-	IED2-TRAFO PROTN(LV REF)
BCT4-2	3000/1A	X	>765	<25MA	≤10	-	IED1-TRAFO PROTN(LV REF)
BCT4-3	800/5A	10P10	-	-	-	15	LV STANDBY E/F

AS-BUILT BY _____ DATE _____	CONTRACT NO. 11131113/00	JOB ORDER NO. S-13656	
00 / 13 04 / FOR APPROVAL (REV. NO. / DATE / DESCRIPTION)	DRAWN BY RIZ CHECKED BY JKR	PRIMARY SYSTEM (GT-1)	
	DATE STARTED 24.01.2013 DATE COMPLETED _____	132/13.8KV GT-1 RELAY PANEL-1/2	
	OPRG. DEPT. CTPD ENG. DEPT. AUT-PSAC	S/S 8709-132/13.8KV IN AL-KHARJ CITY	
		RIYADH SAUDI ARABIA	

الشركة الوطنية لنقل الكهرباء
نقل الكهرباء
National Grid SA

INDEX	PLANT NO.	DRAWING NUMBER	SHEET NO. SHT	SHEET NO. CONT.	REV. NO.
-	C421	CD-322928	054	055	00

NG/D2-0 (2012/01)
DMS VECTOR NGD200

THIS DRAWING AND THE INFORMATION CONTAINED HEREIN ARE THE SOLE PROPERTY OF National Grid SA NO REPRODUCTION IN FULL OR IN PART SHALL BE OBTAINED FROM THIS DOCUMENT WITHOUT THE WRITTEN CONSENT OF ITS OWNER.

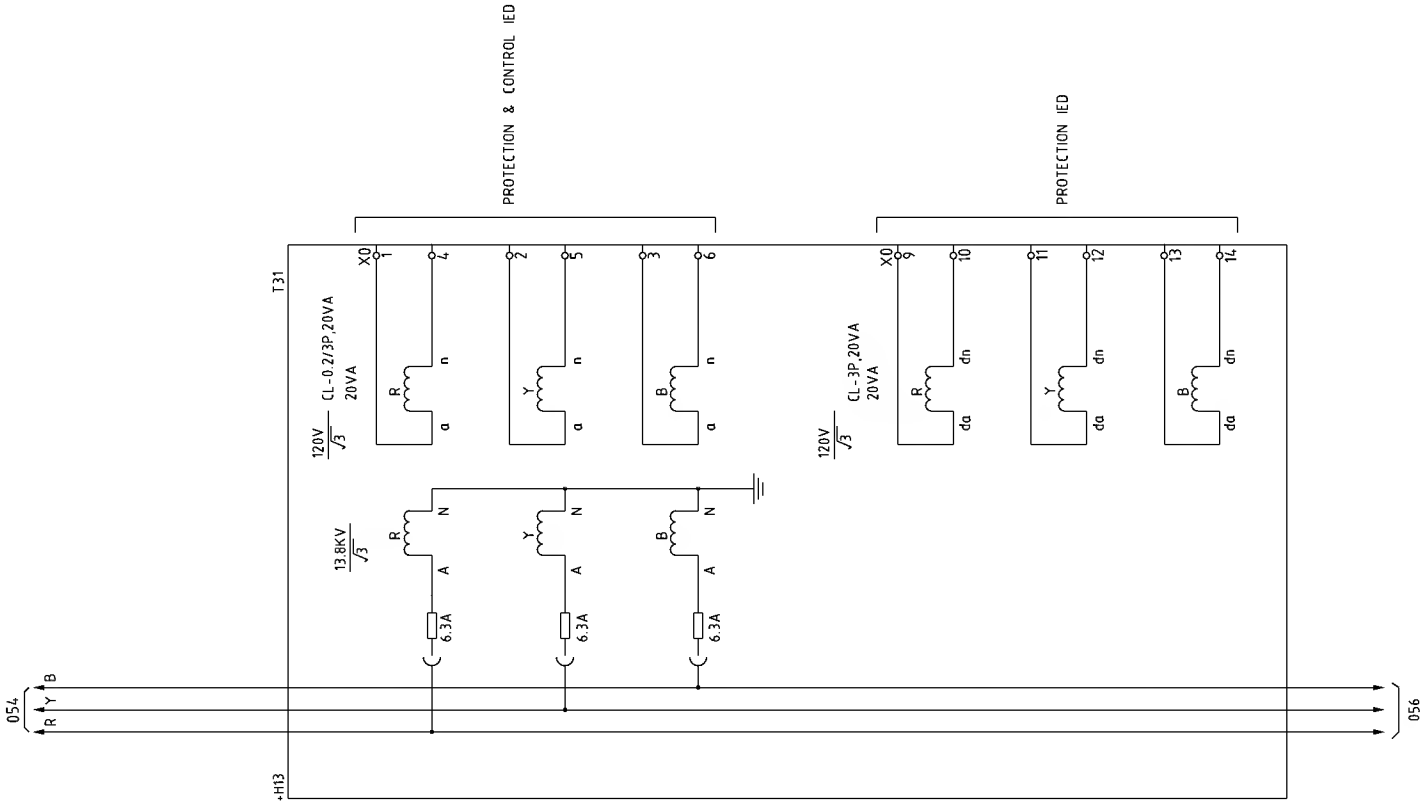

AS-BUILT BY _____ DATE _____	CONTRACT NO. 11131113/00	JOB ORDER NO. S-13656	PRIMARY SYSTEM (GT-1)	نقل الكهرباء الشركة الوطنية لنقل الكهرباء National Grid SA
	DRAWN BY RIZ	CHECKED BY JKR	132/13.8KV GT-1 RELAY PANEL-1/2	
00 / 13 04 / FOR APPROVAL	DATE STARTED 24.01.2013	DATE COMPLETED _____	S/S 8709-132/13.8KV IN AL-KHARJ CITY	
REV. NO. / DATE / DESCRIPTION	ORG. DEPT. CTPD	ENG. DEPT. AUT-PSAC	RIYADH SAUDI ARABIA	

INDEX	PLANT NO.	DRAWING NUMBER	SHEET NO. SHT	SHEET NO. CONT.	REV. NO.
-	C421	CD-322928	055	056	00

NG/D2-0 (2012/01)

DMS | VECTOR | NGD200

THIS DRAWING AND THE INFORMATION CONTAINED HEREIN ARE THE SOLE PROPERTY OF National Grid SA NO REPRODUCTION IN FULL OR IN PART SHALL BE OBTAINED FROM THIS DOCUMENT WITHOUT THE WRITTEN CONSENT OF ITS OWNER.

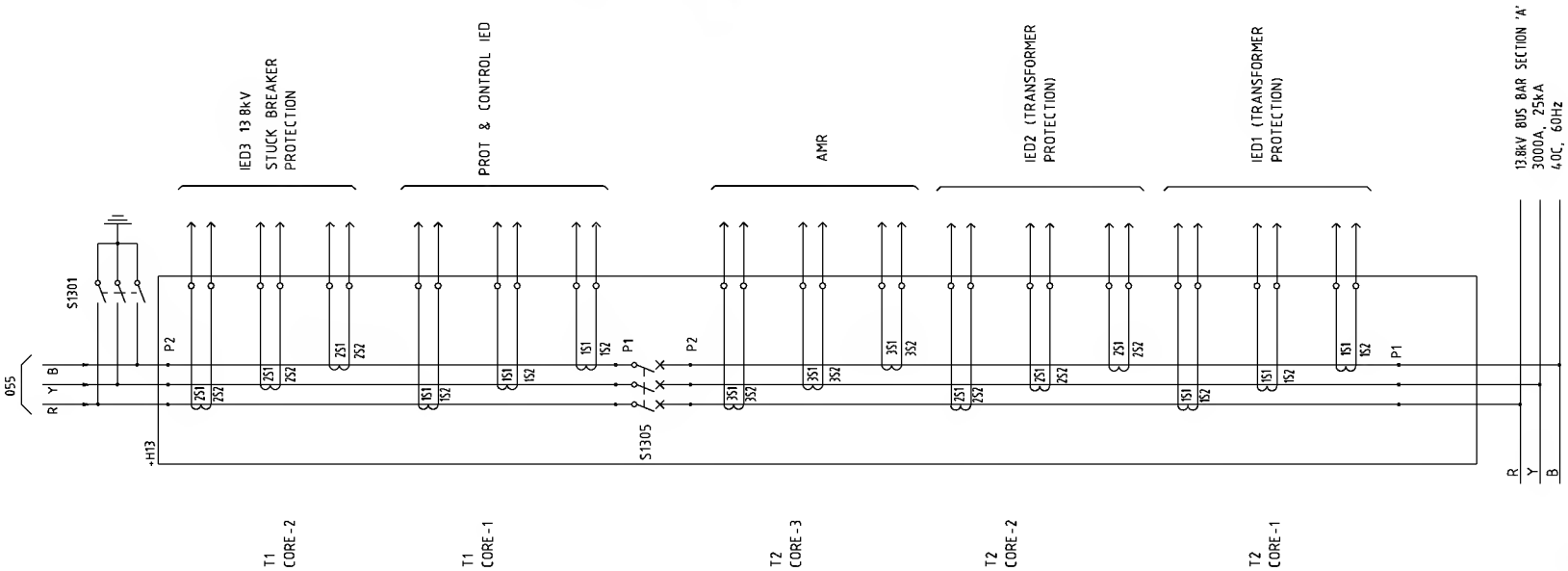

CT	RATIO	CLASS	VK IN VOLTS	IMAG @ VK IN mA	RCT IN (OHMS)	BURDEN IN VA	FUNCTION
T1-1	3000/1A	5P20	-	<25	<10	30	PROTECTION & CONTROL IED
T1-2	3000/1A	10P10	-	<25	<10	30	IED3 (13.8kV STUCK BKR PROTECTION)
T2-1	3000/1A	X	765	<25	<10	-	IED1 (TRANSFORMER PROTECTION)
T2-2	3000/1A	X	765	<25	<10	-	IED2 (TRANSFORMER PROTECTION)
T2-3	3000/1A	0.2Fs5	-	-	-	15	AMR

AS-BUILT BY _____ DATE _____ | CONTRACT NO. 11131113/00 | JOB ORDER NO. S-13656

REV. NO.	DATE	DESCRIPTION
00	13 04	FOR APPROVAL

DRAWN BY RIZ CHECKED BY JKR
DATE STARTED 24.01.2013 DATE COMPLETED _____
DPRG. DEPT. CTPD ENG. DEPT. AUT-PSAC

PRIMARY SYSTEM (GT-1)
132/13.8KV GT-1 RELAY PANEL-1/2
S/S 8709-132/13.8KV IN AL-KHARJ CITY
RIYADH SAUDI ARABIA

الشركة الوطنية لنقل الكهرباء
نقل الكهرباء
National Grid SA

INDEX	PLANT NO.	DRAWING NUMBER	SHEET NO. SHT	SHEET NO. CONT.	REV. NO.
-	C421	CD-322928	056	211	00

NG/D2-0 (2012/01)
DMS VECTOR NGD200

THIS DRAWING AND THE INFORMATION CONTAINED HEREIN ARE THE SOLE PROPERTY OF National Grid SA NO REPRODUCTION IN FULL OR IN PART SHALL BE OBTAINED FROM THIS DOCUMENT WITHOUT THE WRITTEN CONSENT OF ITS OWNER.

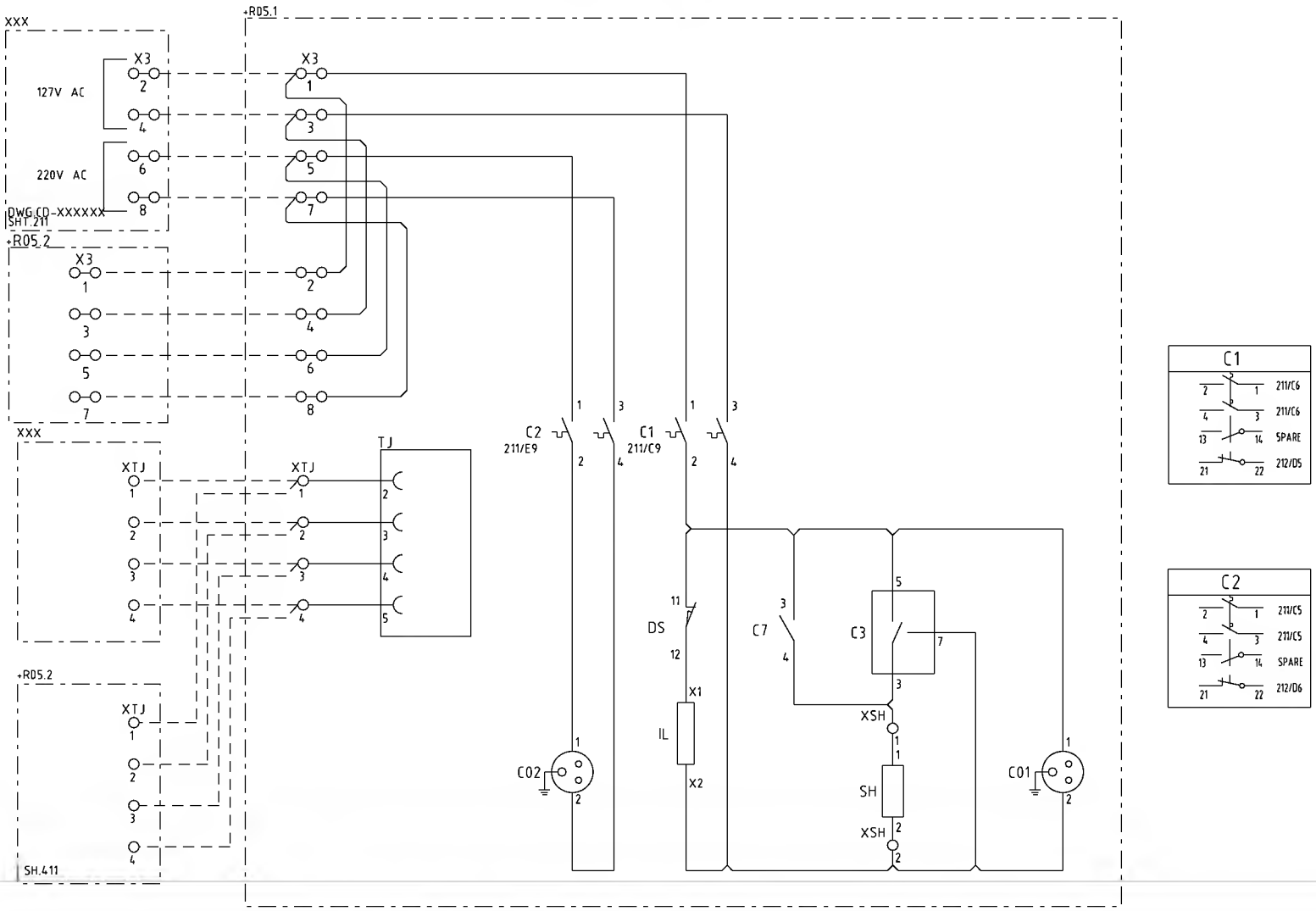

AS-BUILT BY _____ DATE _____	CONTRACT NO. 11131113/00	JOB ORDER NO. S-13656	AC SUPPLY FOR ILLUMINATION & POWER SOCKET	الشركة الوطنية لنقل الكهرباء — نقل الكهرباء National Grid SA
	DRAWN BY RIZ	CHECKED BY JKR	132/13.8kV GT-1 RELAY PANEL-1 +R05.1	
00 / 13 04 / FOR APPROVAL	DATE STARTED 24.01.2013	DATE COMPLETED	S/S 8709-132/13.8KV IN AL-KHARJ CITY	INDEX - / PLANT NO. C421 / DRAWING NUMBER CD-322928 / SHEET NO. SHT 211 CONT. 212 / REV. NO. 00
REV. NO. / DATE / DESCRIPTION	ORG. DEPT. CTPD	ENG. DEPT. AUT-PSAC	RIYADH SAUDI ARABIA	

NG/D2-0 (2012/01)

DMS | VECTOR | NGD200

THIS DRAWING AND THE INFORMATION CONTAINED HEREIN ARE THE SOLE PROPERTY OF National Grid SA NO REPRODUCTION IN FULL OR IN PART SHALL BE OBTAINED FROM THIS DOCUMENT WITHOUT THE WRITTEN CONSENT OF ITS OWNER.

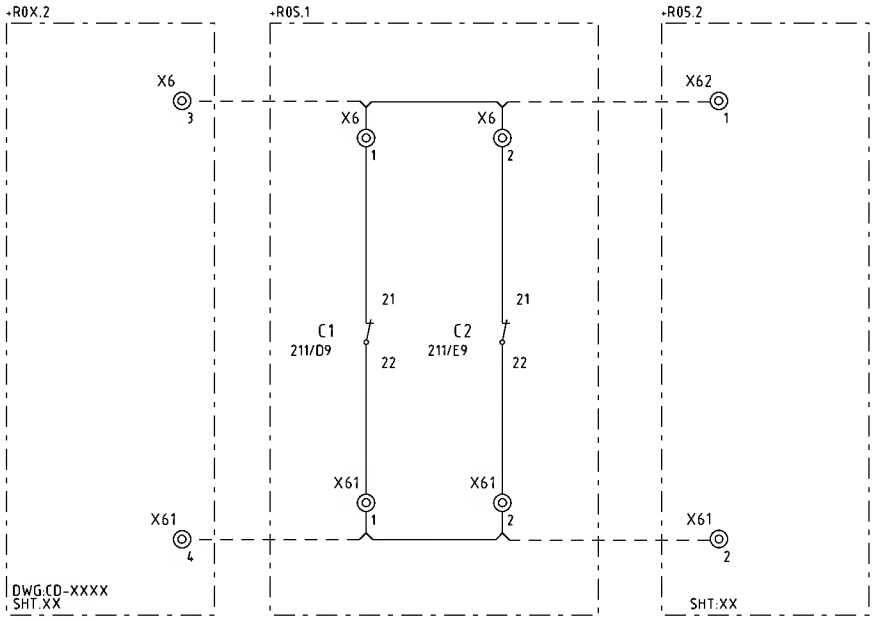

AS-BUILT BY _____ DATE _____	CONTRACT NO. 11131113/00	JOB ORDER NO. S-13656	CUB.LIGHTING,HEATER&SOKET ALARM CKT.	
			132/13.8kV GT-1 RELAY PANEL-1 +R05.1	
		DRAWN BY RIZ CHECKED BY JKR	S/S 8709-132/13.8KV IN AL-KHARJ CITY	
00	13 04	FOR APPROVAL	DATE STARTED 24.01.2013 DATE COMPLETED _____	RIYADH SAUDI ARABIA
REV. NO.	DATE	DESCRIPTION	OPRG. DEPT. CTPD ENG. DEPT. AUT-PSAC	

الشركة الوطنية لنقل الكهرباء

نقل الكهرباء
National Grid SA

INDEX	PLANT NO.	DRAWING NUMBER	SHEET NO. SHT	SHEET NO. CONT.	REV. NO.
-	C421	CD-322928	212	216	00

NG/D2-0 (2012/01)

DMS | VECTOR | NGD200

THIS DRAWING AND THE INFORMATION CONTAINED HEREIN ARE THE SOLE PROPERTY OF National Grid SA NO REPRODUCTION IN FULL OR IN PART SHALL BE OBTAINED FROM THIS DOCUMENT WITHOUT THE WRITTEN CONSENT OF ITS OWNER.

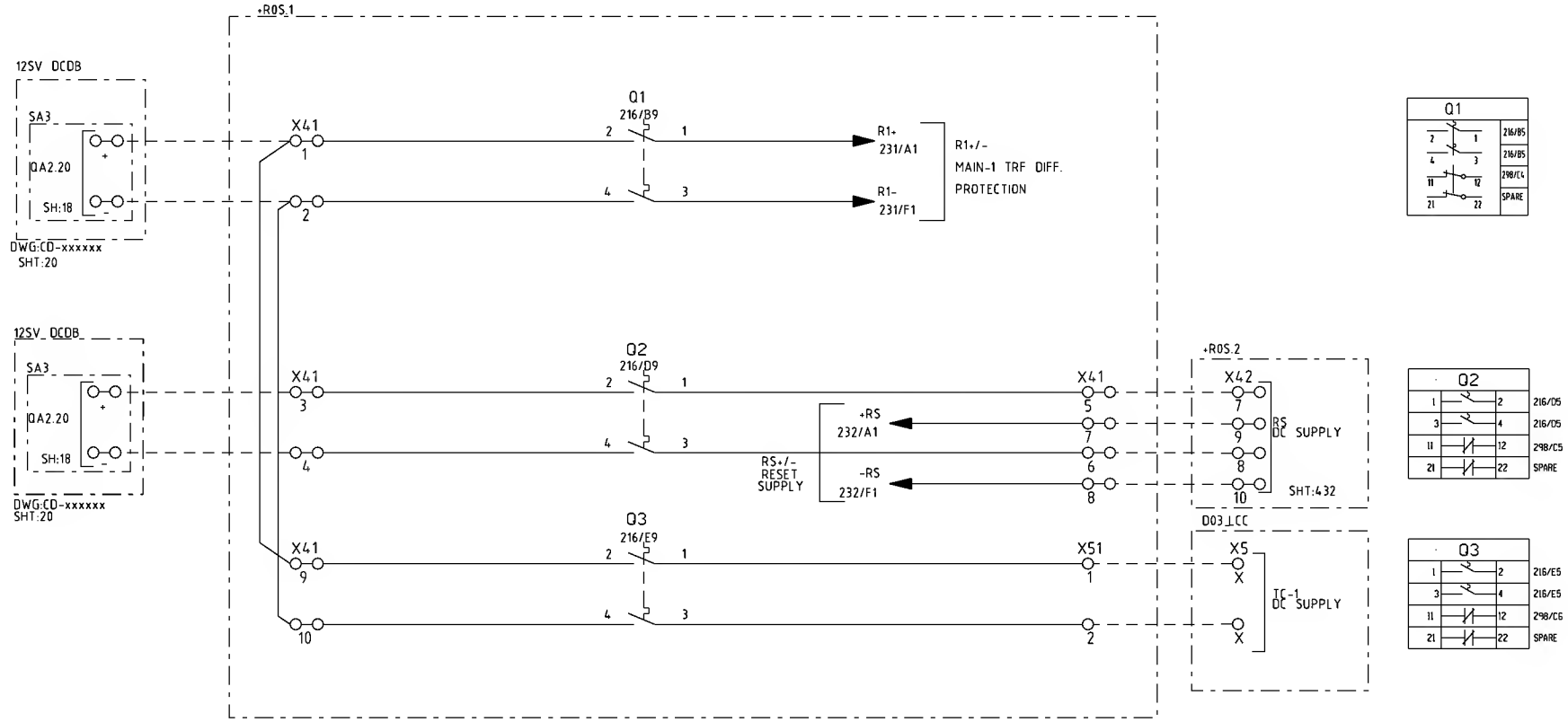

REV. NO.	DATE	DESCRIPTION
00	13 04	FOR APPROVAL

AS-BUILT BY _____ DATE _____

CONTRACT NO. 11131113/00

JOB ORDER NO. S-13656

DRAWN BY RIZ CHECKED BY JKR

DATE STARTED 24.01.2013 DATE COMPLETED _____

DPRG. DEPT. CTPD ENG. DEPT. AUT-PSAC

DC SUPPLY DISTRIBUTION

132/13.8kV GT-1 RELAY PANEL-1 +R05.1

S/S 8709-132/13.8KV IN AL-KHARJ CITY

RIYADH SAUDI ARABIA

الشركة الوطنية لنقل الكهرباء

نقل الكهرباء National Grid SA

INDEX	PLANT NO.	DRAWING NUMBER	SHEET NO. SHT	SHEET NO. CONT.	REV. NO.
-	C421	CD-322928	216	221	00

NG/D2-0 (2012/01)

DMS VECTOR NGD200

THIS DRAWING AND THE INFORMATION CONTAINED HEREIN ARE THE SOLE PROPERTY OF National Grid SA NO REPRODUCTION IN FULL OR IN PART SHALL BE OBTAINED FROM THIS DOCUMENT WITHOUT THE WRITTEN CONSENT OF ITS OWNER.

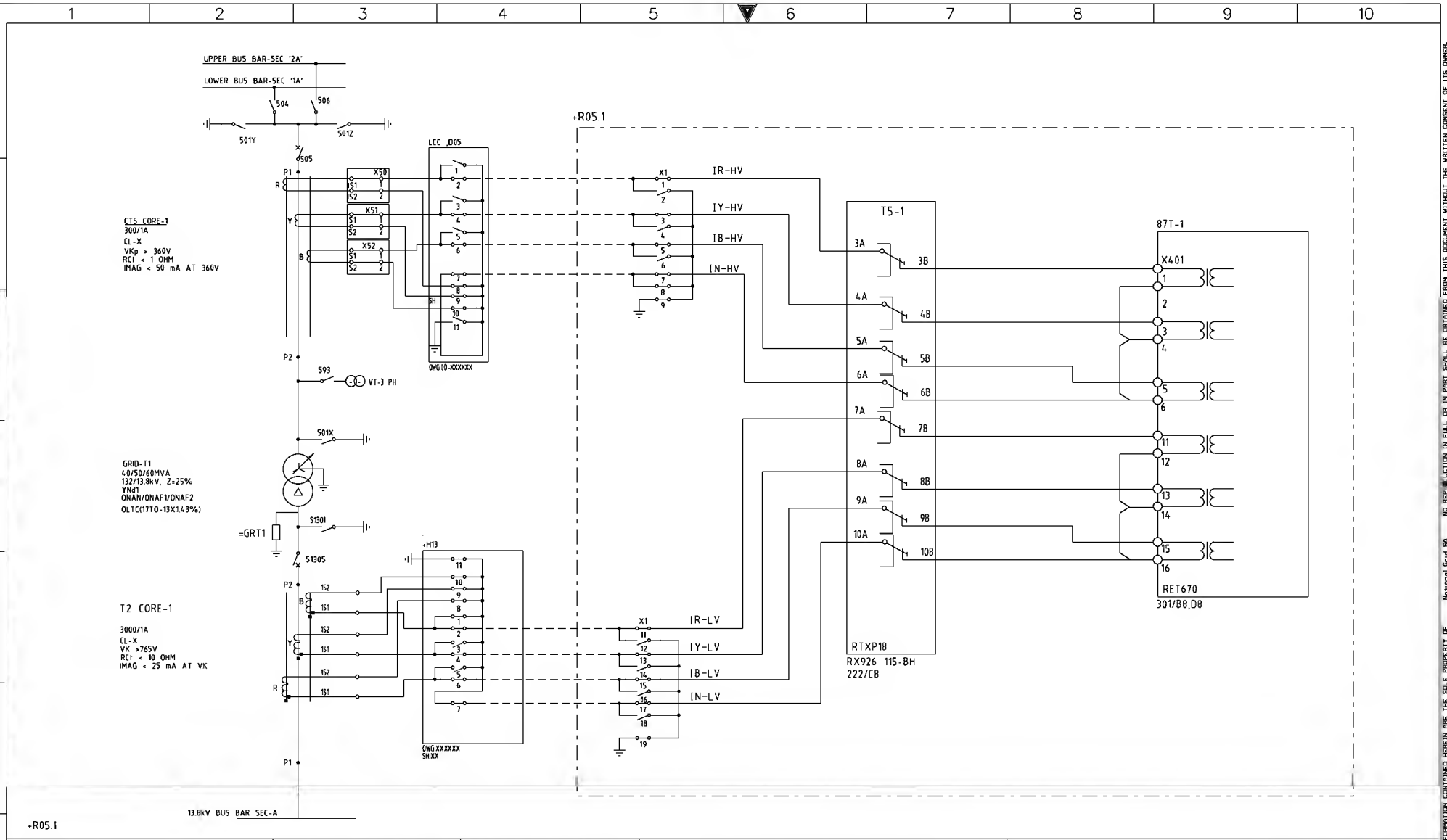

+R05.1

AS-BUILT BY _____ DATE _____	CONTRACT NO. 11131113/00	JOB ORDER NO. S-13656

REV. NO.	DATE	DESCRIPTION
00	13 04	FOR APPROVAL

DRAWN BY RIZ CHECKED BY JKR
DATE STARTED 24.01.2013 DATE COMPLETED _____
ORG. DEPT. CTPD ENG. DEPT. AUT-PSAC

CT CIRCUITS 87T-1 RELAY
132/13.8kV GT-1 RELAY PANEL-1 +R05.1
S/S 8709-132/13.8KV IN AL-KHARJ CITY
RIYADH SAUDI ARABIA

الشركة الوطنية لنقل الكهرباء
نقل الكهرباء
National Grid SA

INDEX	PLANT NO.	DRAWING NUMBER	SHEET NO. SHT	SHEET NO. CONT.	REV. NO.
-	C421	CD-322928	221	222	00

NG/D2-0 (2012/01)
DMS VECTOR NGD200

THIS DRAWING AND THE INFORMATION CONTAINED HEREIN ARE THE SOLE PROPERTY OF National Grid SA NO REPRODUCTION IN FULL OR IN PART SHALL BE OBTAINED FROM THIS DOCUMENT WITHOUT THE WRITTEN CONSENT OF ITS OWNER.

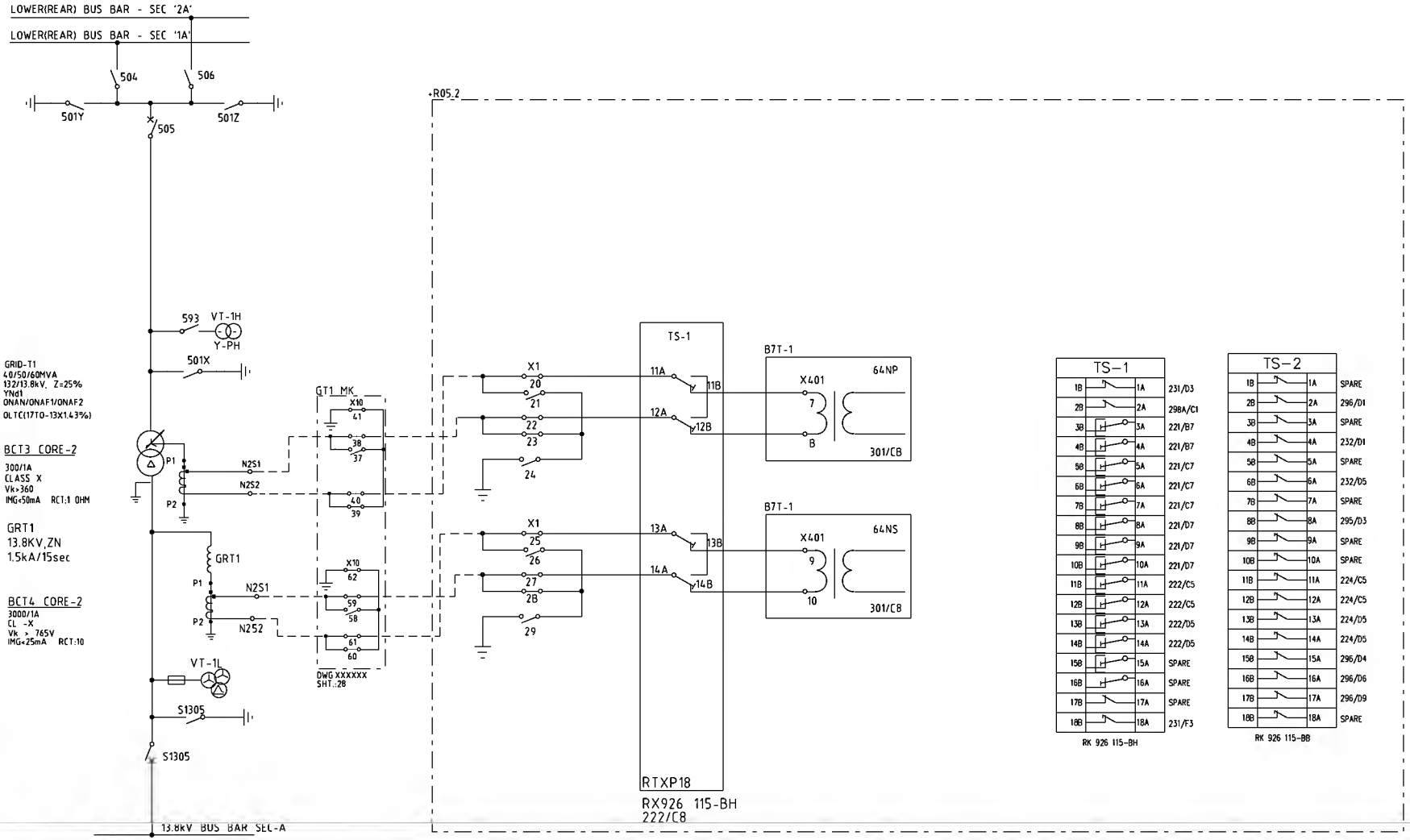

+R05.1

AS-BUILT BY _____ DATE _____	CONTRACT NO. 11131113/00	JOB ORDER NO. S-13656	CT CIRCUITS 87T-1 RELAY	الشركة الوطنية لنقل الكهرباء — نقل الكهرباء National Grid SA
	DRAWN BY RIZ	CHECKED BY JKR	132/13.8kV GT-1 RELAY PANEL-1 +R05.1	
00 / 13 04 / FOR APPROVAL	DATE STARTED 24.01.2013	DATE COMPLETED	S/S 8709-132/13.8KV IN AL-KHARJ CITY	INDEX - / PLANT NO. C421 / DRAWING NUMBER CD-322928 / SHEET NO. SHT 222 CONT. 223 / REV. NO. 00
REV. NO. / DATE / DESCRIPTION	ORG. DEPT. CTPD	ENG. DEPT. AUT-PSAC	RIYADH SAUDI ARABIA	NG/D2-0 (2012/01)
				DMS / VECTOR / NGD200

THIS DRAWING AND THE INFORMATION CONTAINED HEREIN ARE THE SOLE PROPERTY OF National Grid SA NO REPRODUCTION IN FULL OR IN PART SHALL BE OBTAINED FROM THIS DOCUMENT WITHOUT THE WRITTEN CONSENT OF ITS OWNER.

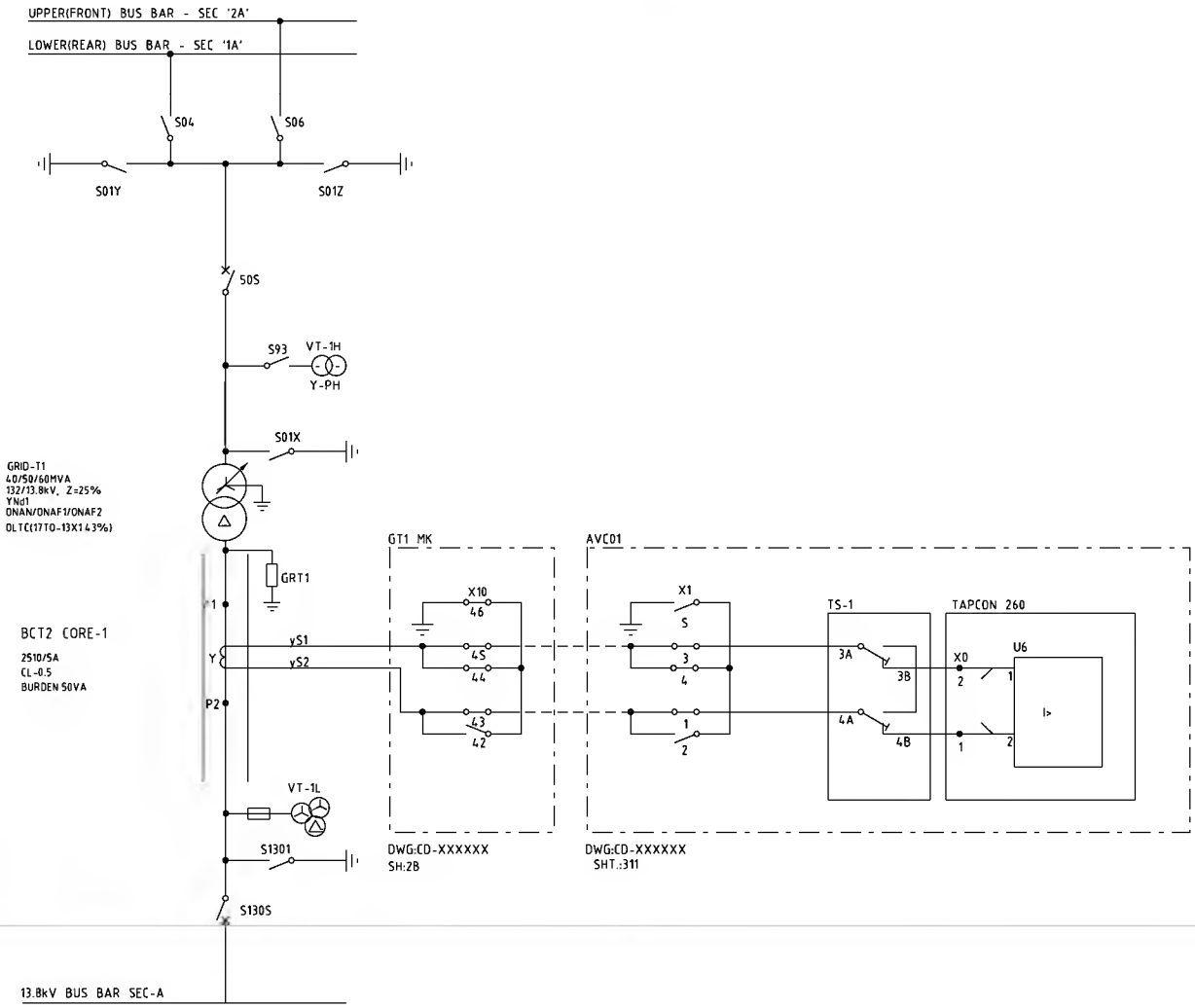

+R05.1

AS-BUILT BY _____ DATE _____	CONTRACT NO. 11131113/00	JOB ORDER NO. S-13656

REV. NO.	DATE	DESCRIPTION
00	13 04	FOR APPROVAL

DRAWN BY RIZ CHECKED BY JKR
DATE STARTED 24.01.2013 DATE COMPLETED _____
DPRG. DEPT. CTPD ENG. DEPT. AUT-PSAC

CT CIRCUITS 87T-1 RELAY
132/13.8kV GT-1 RELAY PANEL-1 +R05.1
S/S 8709-132/13.8KV IN AL-KHARJ CITY
RIYADH SAUDI ARABIA

الشركة الوطنية لنقل الكهرباء
نقل الكهرباء
National Grid SA

INDEX	PLANT NO.	DRAWING NUMBER	SHEET NO. SHT	SHEET NO. CONT.	REV. NO.
-	C421	CD-322928	223	224	00

NG/D2-0 (2012/01)
DMS VECTOR NGD200

THIS DRAWING AND THE INFORMATION CONTAINED HEREIN ARE THE SOLE PROPERTY OF National Grid SA NO REPRODUCTION IN FULL OR IN PART SHALL BE OBTAINED FROM THIS DOCUMENT WITHOUT THE WRITTEN CONSENT OF ITS OWNER.

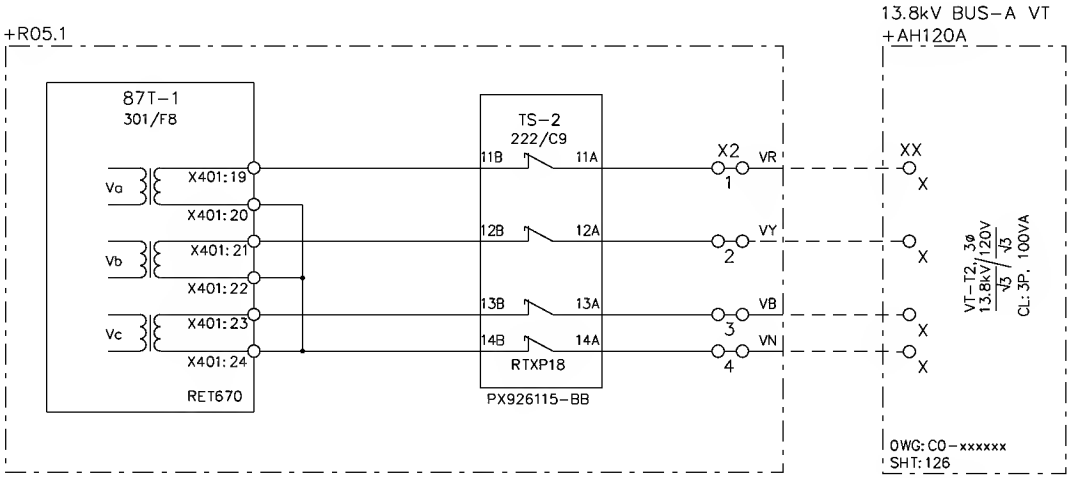

+R05.1

AS-BUILT BY _____ DATE _____	CONTRACT NO. 11131113/00	JOB ORDER NO. S-13656	VT CIRCUITS 87T-1 RELAY	الشركة الوطنية لنقل الكهرباء — نقل الكهرباء National Grid SA
	DRAWN BY RIZ	CHECKED BY JKR	132/13.8kV GT-1 RELAY PANEL-1 +R05.1	
00 / 13 04 / FOR APPROVAL	DATE STARTED 24.01.2013	DATE COMPLETED _____	S/S 8709-132/13.8KV IN AL-KHARJ CITY	
REV. NO. / DATE / DESCRIPTION	OPRG. DEPT. CTPD	ENG. DEPT. AUT-PSAC	RIYADH SAUDI ARABIA	

INDEX	PLANT NO.	DRAWING NUMBER	SHEET NO. SHT	SHEET NO. CONT.	REV. NO.
-	C421	CD-322928	224	227	00

NG/02-0 (2012/01)

DMS | VECTOR | NG0200

THIS DRAWING AND THE INFORMATION CONTAINED HEREIN ARE THE SOLE PROPERTY OF National Grid SA NO REPRODUCTION IN FULL OR IN PART SHALL BE OBTAINED FROM THIS DOCUMENT WITHOUT THE WRITTEN CONSENT OF ITS OWNER.

		VT	TR COOLER	MAIN TANK	MAIN TANK	OLTC OIL	OLTC OIL
87T-1	MCB	FAIL	OIL LEVEL	OIL LEVEL	LEVEL LOW	LEVELHIGH
PSU	FAIL	ALARM	LOW ALARM	HIGH ALARM	ALARM	ALARM

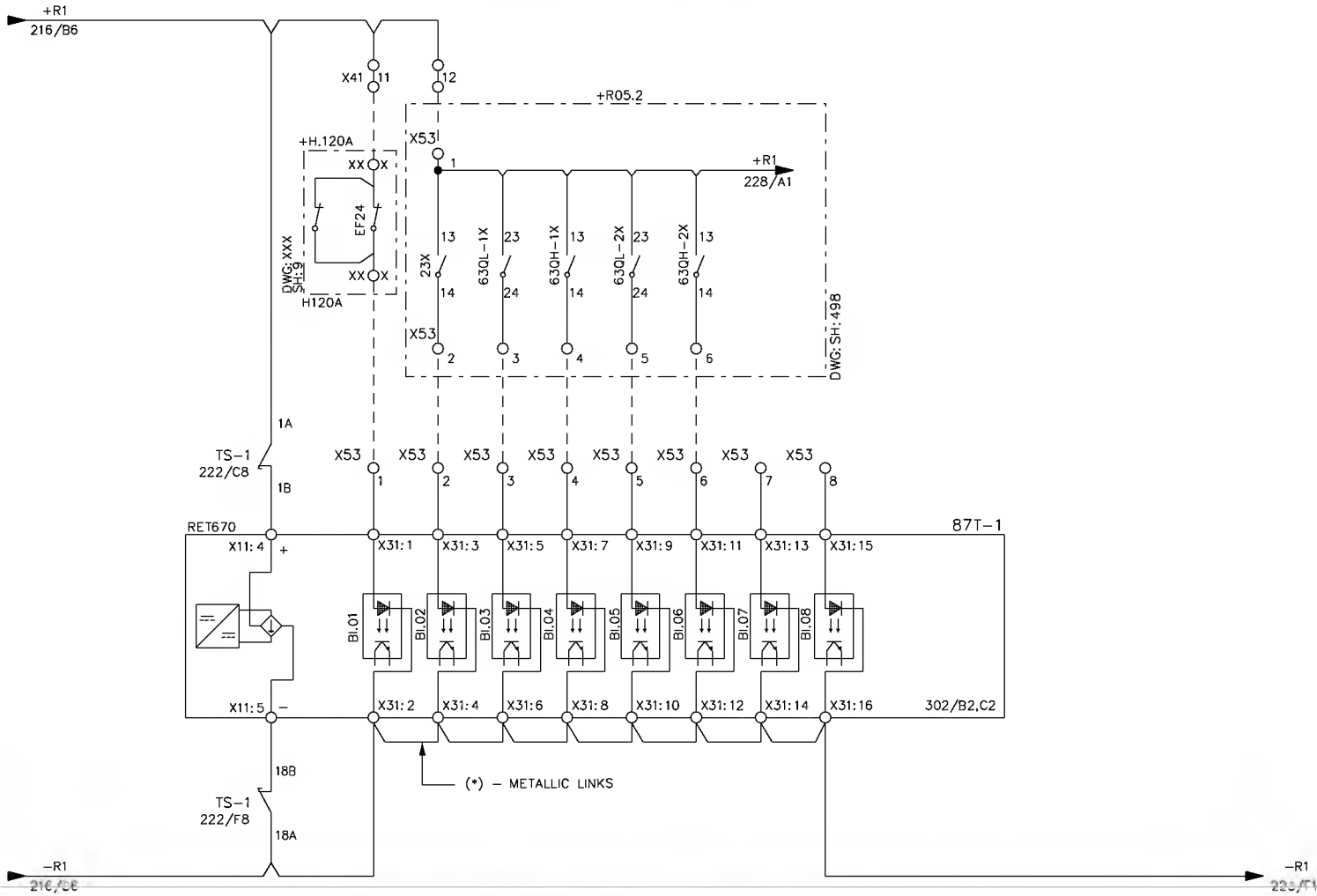

AS-BUILT BY _____ DATE _____	CONTRACT NO. 11131113/00	JOB ORDER NO. S-13656	87T-1 BINARY INPUTS	الشركة الوطنية لنقل الكهرباء — نقل الكهرباء National Grid SA
	DRAWN BY RIZ	CHECKED BY JKR	132/13.8kV GT-1 RELAY PANEL-1 +R05.1	
00 / 13 04 / FOR APPROVAL	DATE STARTED 24.01.2013	DATE COMPLETED _____	S/S 8709-132/13.8KV IN AL-KHARJ CITY	
REV. NO. / DATE / DESCRIPTION	ORG. DEPT. CTPD	ENG. DEPT. AUT-PSAC	RIYADH SAUDI ARABIA	

INDEX	PLANT NO.	DRAWING NUMBER	SHEET NO. SHT	SHEET NO. CONT.	REV. NO.
-	C421	CD-322928	227	228	00

NG/D2-0 (2012/01)

DMS | VECTOR | NGD200

THIS DRAWING AND THE INFORMATION CONTAINED HEREIN ARE THE SOLE PROPERTY OF National Grid SA NO REPRODUCTION IN FULL OR IN PART SHALL BE OBTAINED FROM THIS DOCUMENT WITHOUT THE WRITTEN CONSENT OF ITS OWNER.

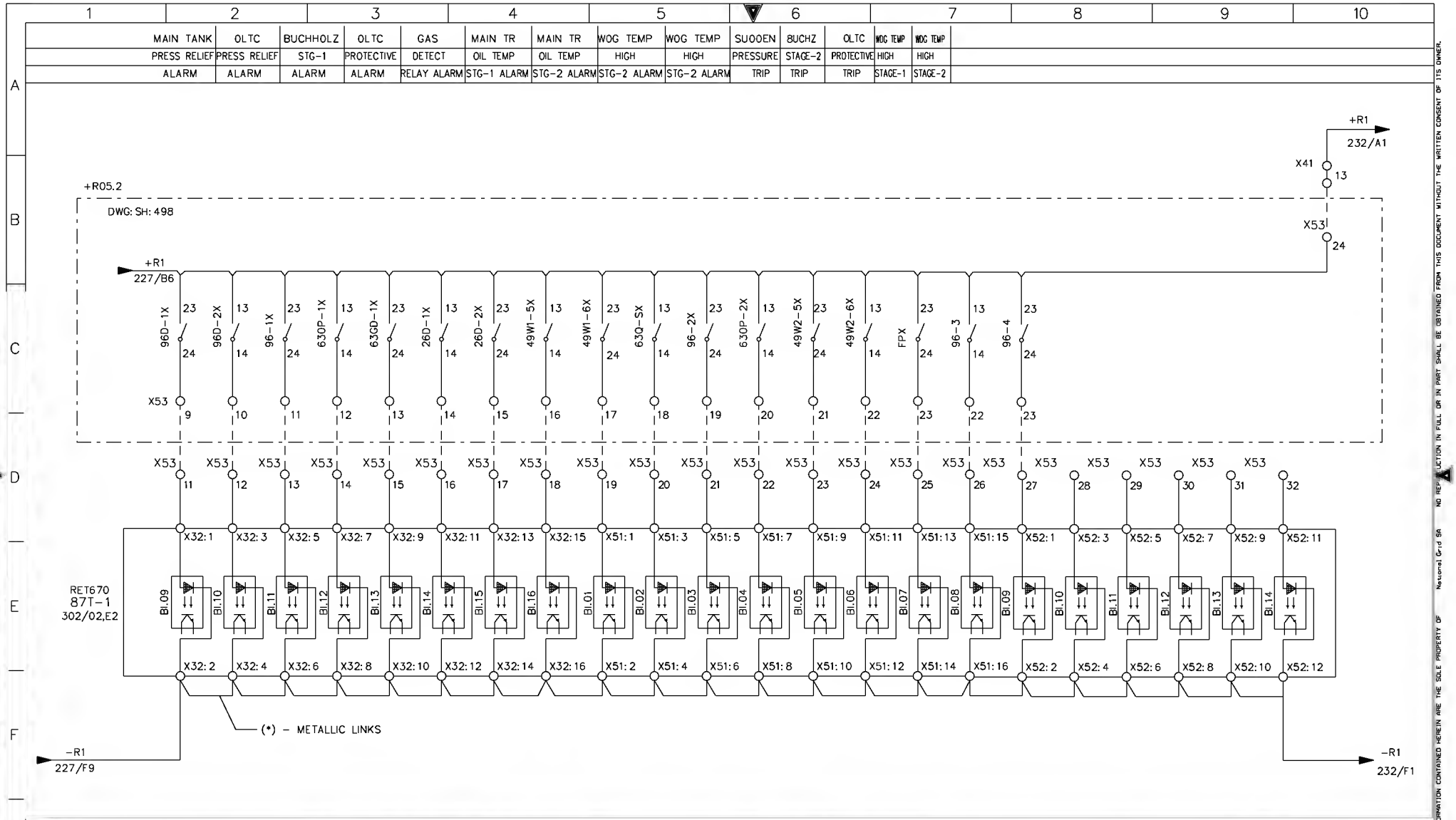

AS-BUILT BY _____ DATE _____	CONTRACT NO. 11131113/00	JOB ORDER NO. S-13656
00 / 13 04 / FOR APPROVAL (REV. NO. / DATE / DESCRIPTION)	DRAWN BY RIZ CHECKED BY JKR	87T-1 BINARY INPUTS
	DATE STARTED 24.01.2013 DATE COMPLETED _____	132/13.8kV GT-1 RELAY PANEL-1 +R05.1
	DPRG. DEPT. CTPD ENG. DEPT. AUT-PSAC	S/S 8709-132/13.8KV IN AL-KHARJ CITY
		RIYADH SAUDI ARABIA

الشركة الوطنية لنقل الكهرباء
نقل الكهرباء
National Grid SA

INDEX	PLANT NO.	DRAWING NUMBER	SHEET NO. SHT	SHEET NO. CONT.	REV. NO.
-	C421	CD-322928	228	232	00

NG/D2-0 (2012/01)
DMS VECTOR NGD200

THIS DRAWING AND THE INFORMATION CONTAINED HEREIN ARE THE SOLE PROPERTY OF National Grid SA NO REPRODUCTION IN FULL OR IN PART SHALL BE OBTAINED FROM THIS DOCUMENT WITHOUT THE WRITTEN CONSENT OF ITS OWNER.

TRANSF. DIFF. MAIN-1 PRDTN. TRIP - 86T1		MAIN-2 PRDTN. TRIP - 86T1		TRANSFORMER MECH. PROTN						
TRANSF. DIFFL. PRDTN.	TRIP RELAY	TRANSF. DIFFL. PRDTN.	51/51N	49W1-5X	630SX	630R2X	TRIP	R1± DC SUPVN.	RS± DC SUPVN.	
87T1/64NP/64NS/50/51P	RESET	87T2/64NP/64NS/50/51P	SBEF	49W2-6X	49W2-5A		51/51NS	SUPPLY	SUPPLY	

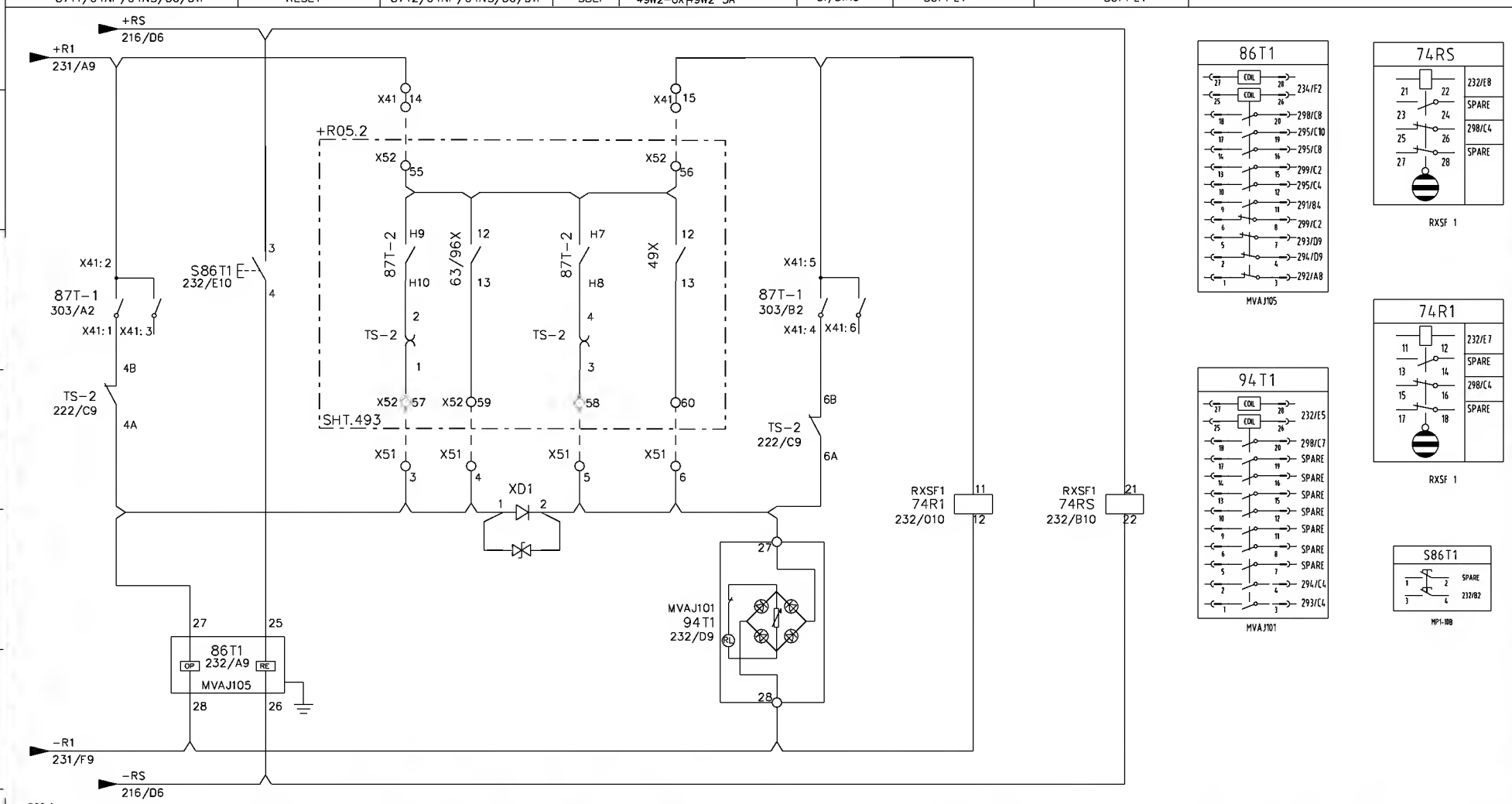

AS-BUILT BY _____ DATE _____	CONTRACT NO. 11131113/00	JDB ORDER NO. S-13656

REV. NO.	DATE	DESCRIPTION
00	13 04	FOR APPROVAL

DRAWN BY RIZ CHECKED BY JKR
DATE STARTED 24.01.2013 DATE COMPLETED _____
DPRG. DEPT. CTPD ENG. DEPT. AUT-PSAC

MAIN-1 TRANSF DIFFL PROT TRIP RELAY CIRCUIT
132/13.8kV GT-1 RELAY PANEL-1 +R05.1
S/S 8709-132/13.8KV IN AL-KHARJ CITY
RIYADH SAUDI ARABIA

الشركة الوطنية لنقل الكهرباء
نقل الكهرباء
National Grid SA

INDEX	PLANT NO.	DRAWING NUMBER	SHEET NO. SHT	SHEET NO. CONT.	REV. NO.
-	C421	CD-322928	232	276	00

NG/D2-0 (2012/01)
DMS VECTOR NGD200

THIS DRAWING AND THE INFORMATION CONTAINED HEREIN ARE THE SOLE PROPERTY OF National Grid SA NO REPRODUCTION IN FULL OR IN PART SHALL BE OBTAINED FROM THIS DOCUMENT WITHOUT THE WRITTEN CONSENT OF ITS OWNER.

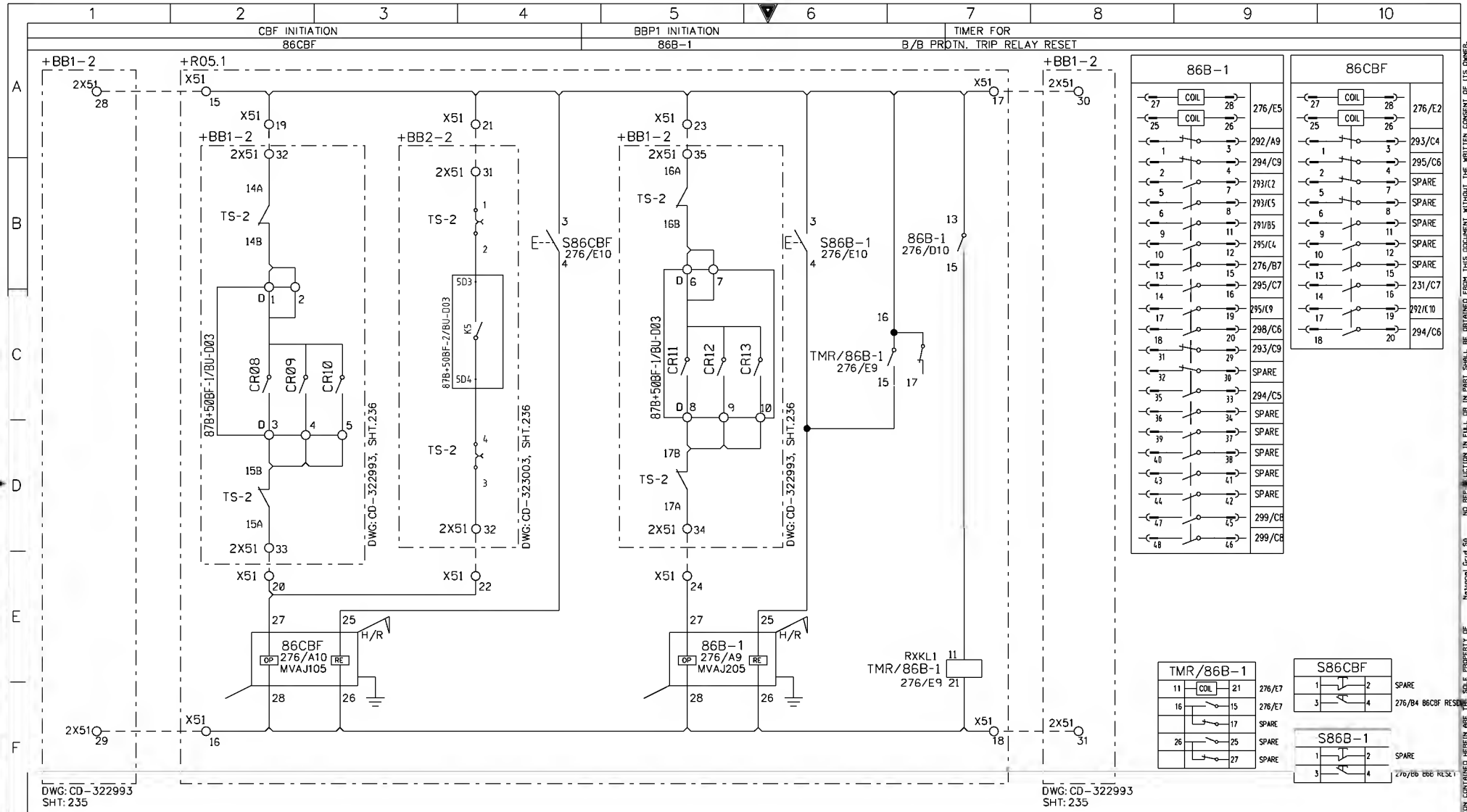

AS-BUILT BY _____ DATE _____	CONTRACT NO. 11131113/00	JOB ORDER NO. S-13656

REV. NO.	DATE	DESCRIPTION
00	13 04	FOR APPROVAL

DRAWN BY RIZ CHECKED BY JKR
DATE STARTED 24.01.2013 DATE COMPLETED _____
DPRG. DEPT. CTPD ENG. DEPT. AUT-PSAC

CBF-1/2 & BUSBAR PROTN-1 TRIP RELAY CIRCUIT
132/13.8kV GT-1 RELAY PANEL-1 +R05.1
S/S 8709-132/13.8KV IN AL-KHARJ CITY
RIYADH SAUDI ARABIA

الشركة الوطنية لنقل الكهرباء
National Grid SA

INDEX	PLANT NO.	DRAWING NUMBER	SHEET NO. SHT	SHEET NO. CONT.	REV. NO.
-	C421	CD-322928	276	277	00

NG/D2-D (2012/01)
DMS VECTOR NGD200

THIS DRAWING AND THE INFORMATION CONTAINED HEREIN ARE THE SOLE PROPERTY OF National Grid SA NO REPRODUCTION IN FULL OR IN PART SHALL BE OBTAINED FROM THIS DOCUMENT WITHOUT THE WRITTEN CONSENT OF ITS OWNER.

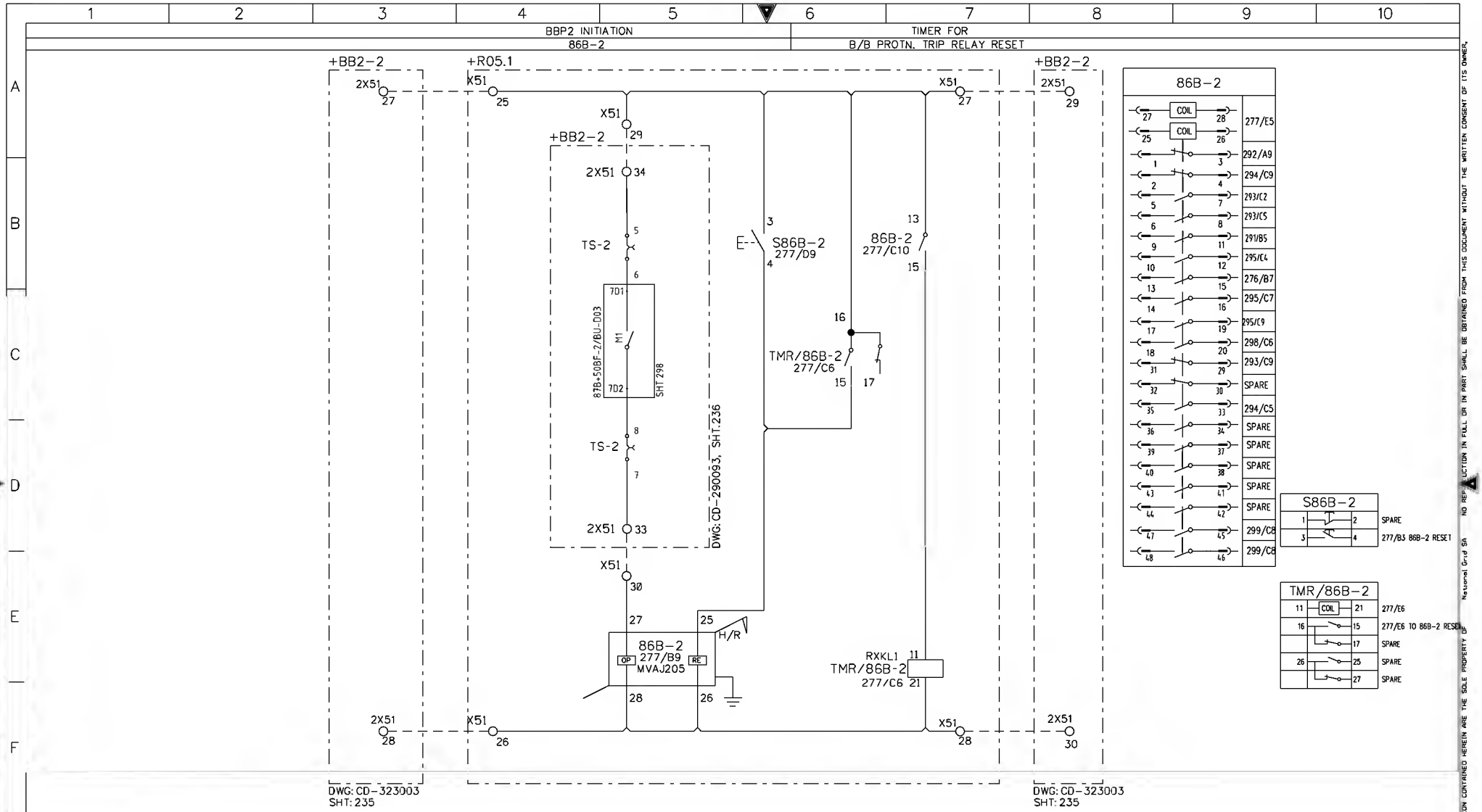

AS-BUILT BY _____ DATE _____	CONTRACT NO. 11131113/00	JOB ORDER NO. S-13656
DRAWN BY RIZ	CHECKED BY JKR	
DATE STARTED 24.01.2013	DATE COMPLETED _____	
OPRG. DEPT. CTPD	ENG. DEPT. AUT-PSAC	

REV. NO.	DATE	DESCRIPTION
00	13 04	FOR APPROVAL

BUSBAR PROTN-2 TRIP RELAY CIRCUIT
132/13.8kV GT-1 RELAY PANEL-1 +R05.1
S/S 8709-132/13.8KV IN AL-KHARJ CITY
RIYADH SAUDI ARABIA

الشركة الوطنية لنقل الكهرباء
نقل الكهرباء
National Grid SA

INDEX	PLANT NO.	DRAWING NUMBER	SHEET NO. SHT	SHEET NO. CONT.	REV. NO.
-	C421	CD-322928	277	291	00

NG/D2-D (2012/01)
DMS VECTOR NGD200

THIS DRAWING AND THE INFORMATION CONTAINED HEREIN ARE THE SOLE PROPERTY OF National Grid SA NO REPRODUCTION IN FULL OR IN PART SHALL BE OBTAINED FROM THIS DOCUMENT WITHOUT THE WRITTEN CONSENT OF ITS OWNER.

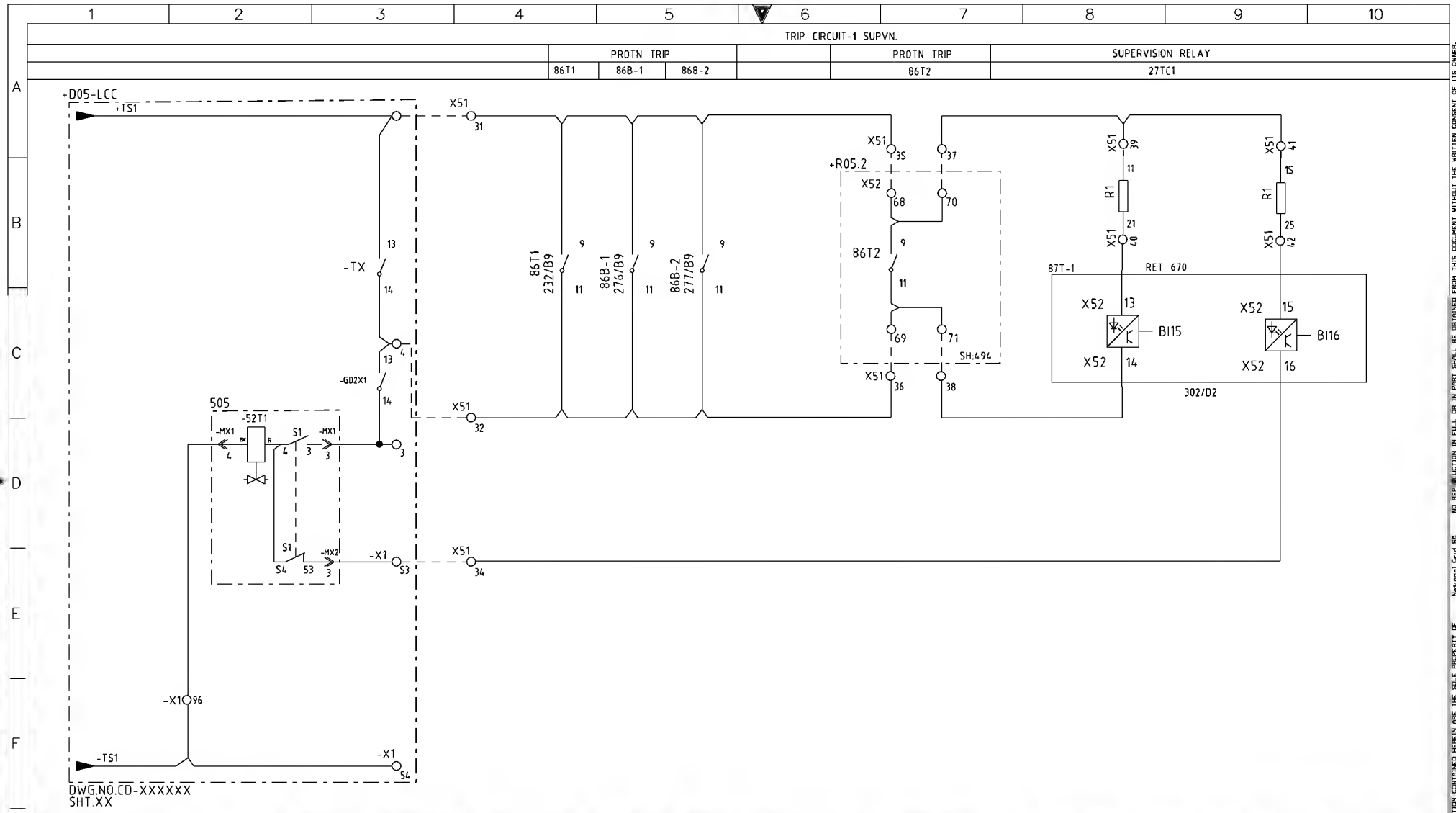

AS-BUILT BY	DATE	CONTRACT NO. 11131113/00	JOB ORDER NO. S-13656
		DRAWN BY RIZ	CHECKED BY JKR
00	13 04	FOR APPROVAL	DATE STARTED 24.01.2013 DATE COMPLETED
REV. NO.	DATE	DESCRIPTION	OPRG. DEPT. CTPD ENG. DEPT. AUT-PSAC

TRIP COIL-1 SUPERVSION CIRCUIT

132/13.8kV GT-1 RELAY PANEL-1 +R05.1

S/S 8709-132/13.8KV IN AL-KHARJ CITY

RIYADH SAUDI ARABIA

الشركة الوطنية لنقل الكهرباء

نقل الكهرباء National Grid SA

INDEX	PLANT NO.	DRAWING NUMBER	SHEET NO. SHT	SHEET NO. CONT.	REV. NO.
-	C421	CD-322928	291	292	00

NG/D2-0 (2012/01)

DMS VECTOR NGD200

THIS DRAWING AND THE INFORMATION CONTAINED HEREIN ARE THE SOLE PROPERTY OF National Grid SA NO REPRODUCTION IN FULL OR IN PART SHALL BE OBTAINED FROM THIS DOCUMENT WITHOUT THE WRITTEN CONSENT OF ITS OWNER.

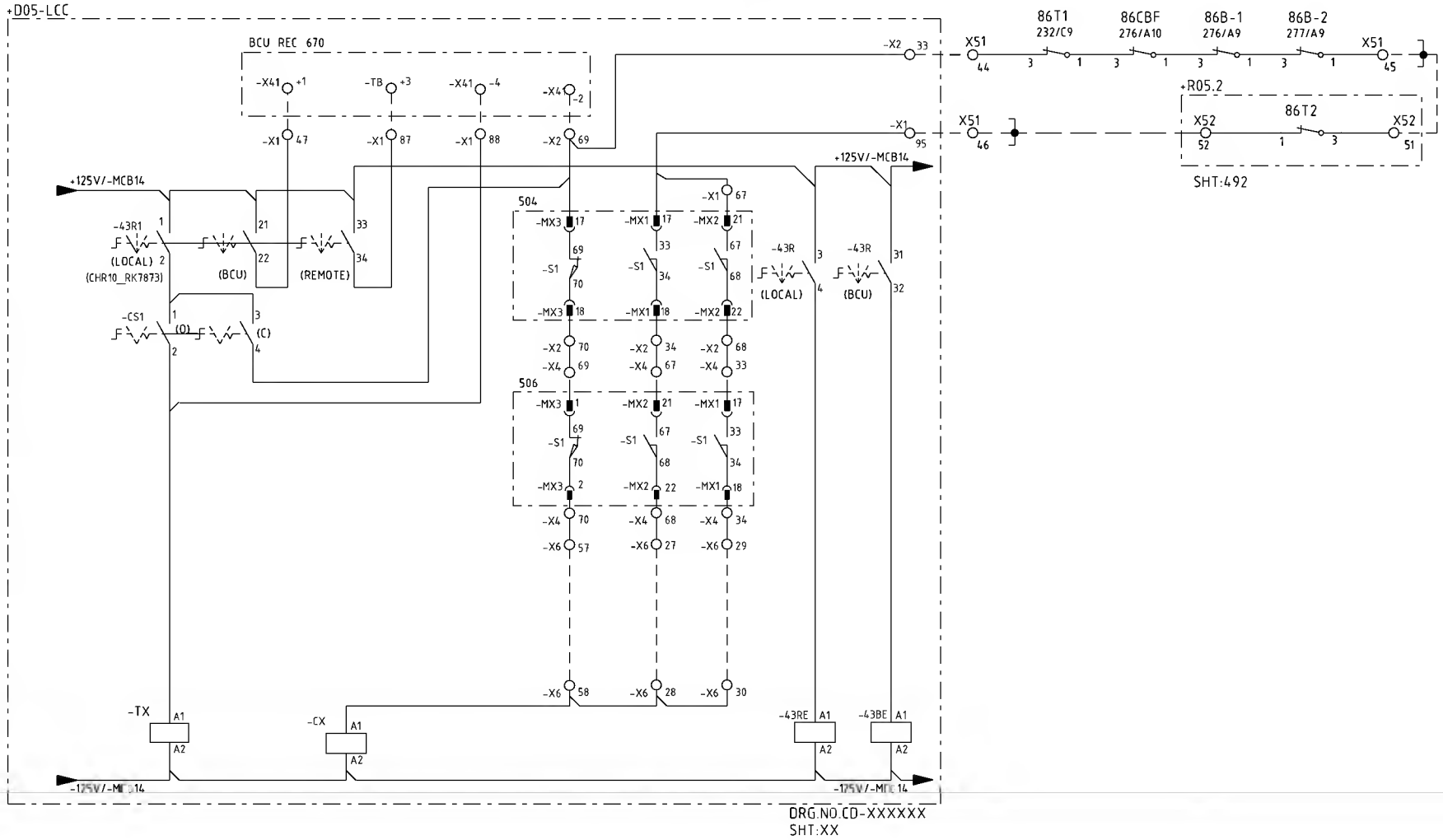

AS-BUILT BY _____ DATE _____	CONTRACT NO. 11131113/00	JOB ORDER NO. S-13656	CB K305 CLOSE BLOCK CIRCUIT	الشركة الوطنية لنقل الكهرباء	نقل الكهرباء National Grid SA
	DRAWN BY RIZ	CHECKED BY JKR	132/13.8kV GT-1 RELAY PANEL-1 +R05.1		
00 / 13 04 / FOR APPROVAL	DATE STARTED 24.01.2013	DATE COMPLETED	S/S 8709-132/13.8KV IN AL-KHARJ CITY		
REV. NO. / DATE / DESCRIPTION	ORG. DEPT. CTPD	ENG. DEPT. AUT-PSAC	RIYADH SAUDI ARABIA		

INDEX	PLANT NO.	DRAWING NUMBER	SHEET NO. SHT	SHEET NO. CONT.	REV. NO.
-	C421	CD-322928	292	293	00

NG/D2-0 (2012/01)

DMS | VECTOR | NGD200

THIS DRAWING AND THE INFORMATION CONTAINED HEREIN ARE THE SOLE PROPERTY OF National Grid SA NO REPRODUCTION IN FULL OR IN PART SHALL BE OBTAINED FROM THIS DOCUMENT WITHOUT THE WRITTEN CONSENT OF ITS OWNER.

ACSE TRIP RELAY			TRANS. LV TRIP RELAY	CBF PROTN TRIP RELAY	BUS BAR PROTN. TRIP RELAY	TRANS. LV TRIP RELAY	ACSE BLOCK
86CBF	86B-1	86B-2	94T1	86CBF	86B-1,86B-2	94T2	86T1,86B-1,86B-2,86CBF,86T2

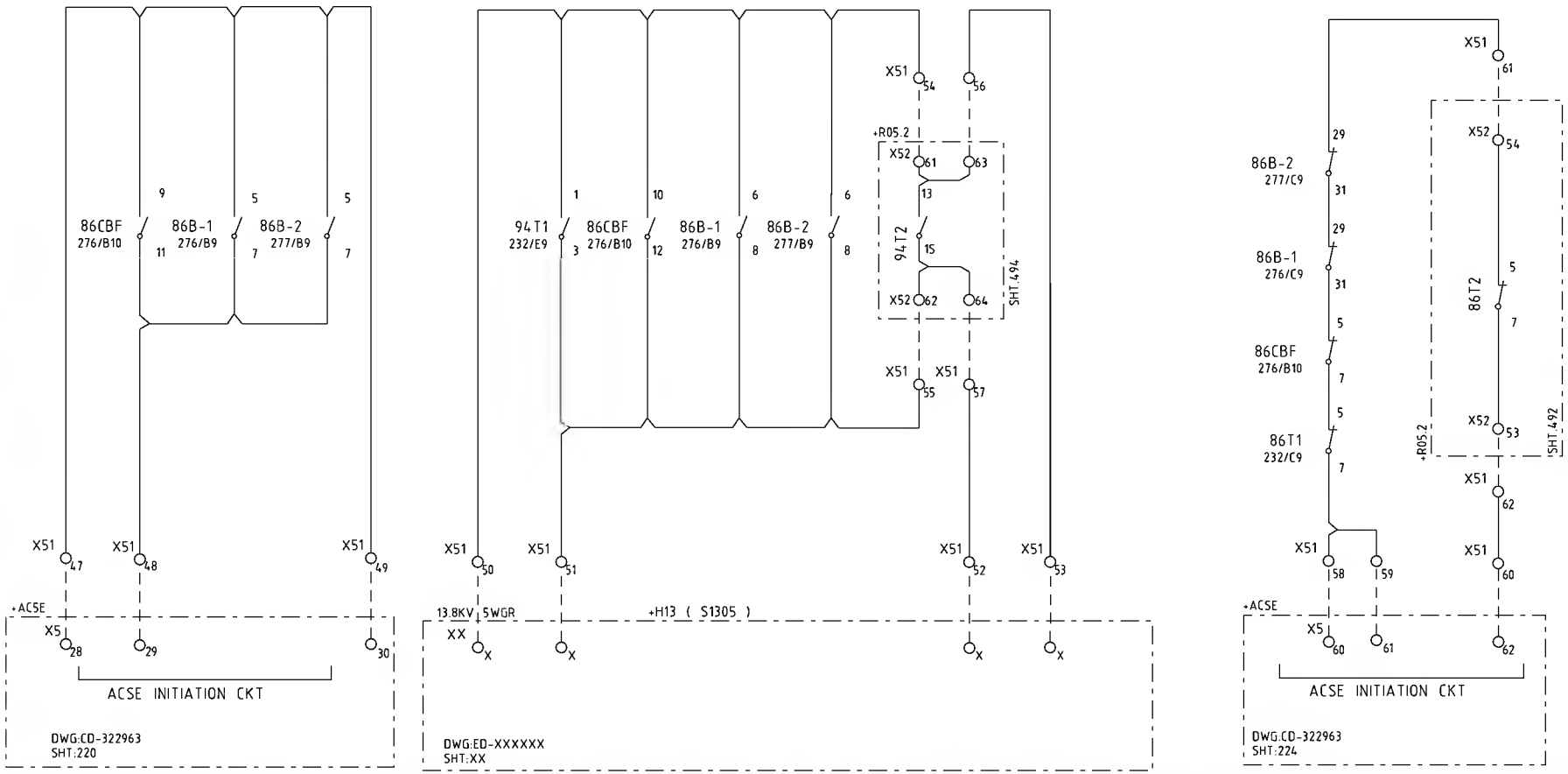

AS-BUILT BY _____ DATE _____	CONTRACT NO. 11131113/00	JOB ORDER NO. S-13656
DRAWN BY RIZ	CHECKED BY JKR	
DATE STARTED 24.01.2013	DATE COMPLETED _____	
ORG. DEPT. CTPD	ENG. DEPT. AUT-PSAC	

REV. NO.	DATE	DESCRIPTION
00	13 04	FOR APPROVAL

CONTACTS FOR ACSE INITIATION & LV TRIPPING TC

132/13.8kV GT-1 RELAY PANEL-1 +R05.1

S/S 8709-132/13.8KV IN AL-KHARJ CITY

RIYADH SAUDI ARABIA

الشركة الوطنية لنقل الكهرباء

نقل الكهرباء National Grid SA

INDEX	PLANT NO.	DRAWING NUMBER	SHEET NO. SHT	SHEET NO. CONT.	REV. NO.
-	C421	CD-322928	293	294	00

NG/D2-0 (2012/01)

DMS VECTOR NGD200

THIS DRAWING AND THE INFORMATION CONTAINED HEREIN ARE THE SOLE PROPERTY OF National Grid SA NO REPRODUCTION IN FULL OR IN PART SHALL BE OBTAINED FROM THIS DOCUMENT WITHOUT THE WRITTEN CONSENT OF ITS OWNER.

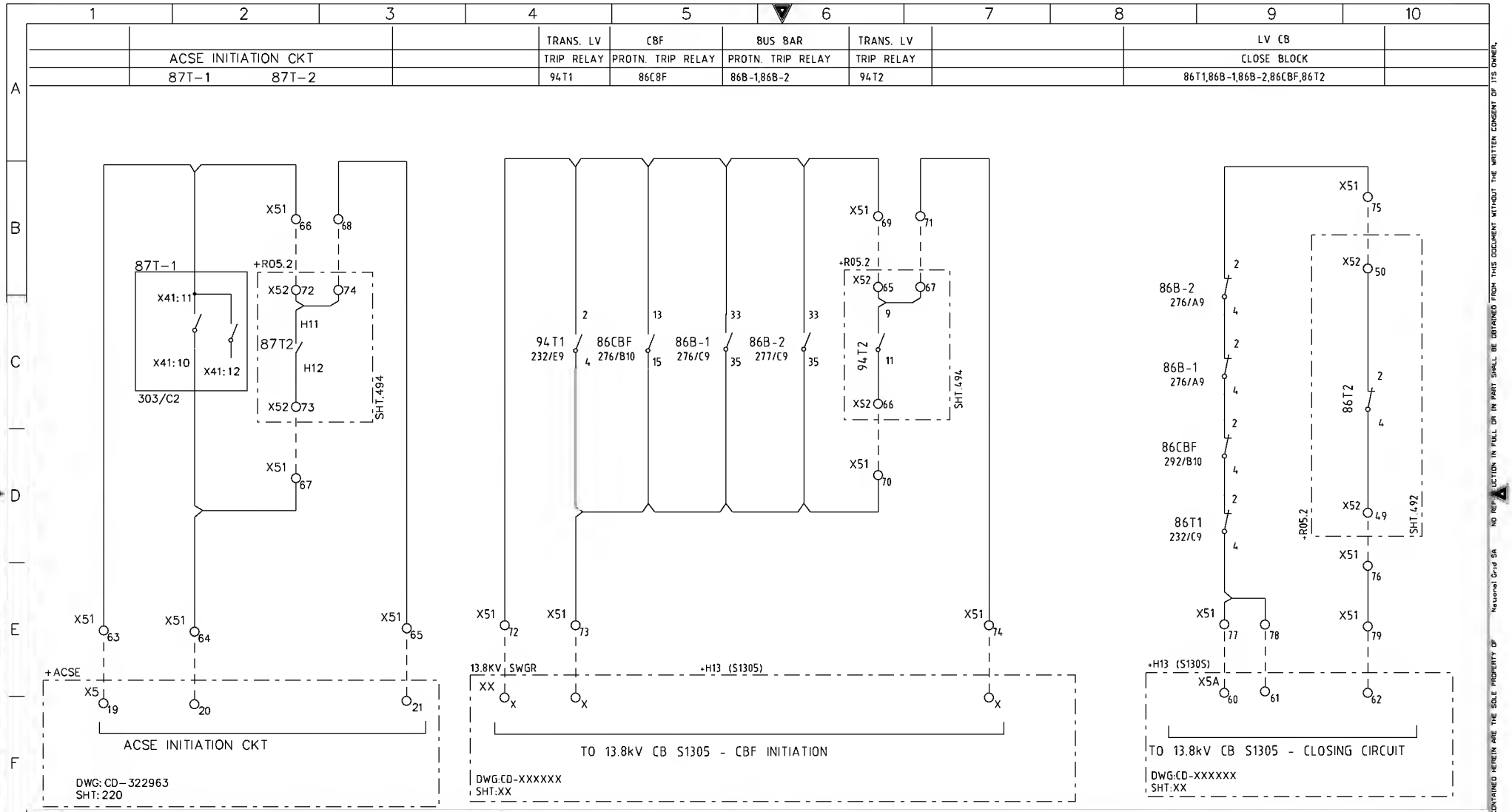

AS-BUILT BY _____ DATE _____	CONTRACT NO. 11131113/00	JOB ORDER NO. S-13656

REV. NO.	DATE	DESCRIPTION
00	13 04	FOR APPROVAL

DRAWN BY RIZ CHECKED BY JKR
DATE STARTED 24.01.2013 DATE COMPLETED _____
OPRG. DEPT. CTPD ENG. DEPT. AUT-PSAC

ACSE INI & LV CLOSE BLK CIRCUIT
132/13.8kV GT-1 RELAY PANEL-1 +R05.1
S/S 8709-132/13.8KV IN AL-KHARJ CITY
RIYADH SAUDI ARABIA

الشركة الوطنية لنقل الكهرباء
نقل الكهرباء National Grid SA

INDEX	PLANT NO.	DRAWING NUMBER	SHEET NO. SHT	SHEET NO. CONT.	REV. NO.
-	C421	CD-322928	294	295	00

NG/D2-D (2012/01)
DMS VECTOR NGD200

THIS DRAWING AND THE INFORMATION CONTAINED HEREIN ARE THE SOLE PROPERTY OF National Grid SA NO REPRODUCTION IN FULL OR IN PART SHALL BE OBTAINED FROM THIS DOCUMENT WITHOUT THE WRITTEN CONSENT OF ITS OWNER.

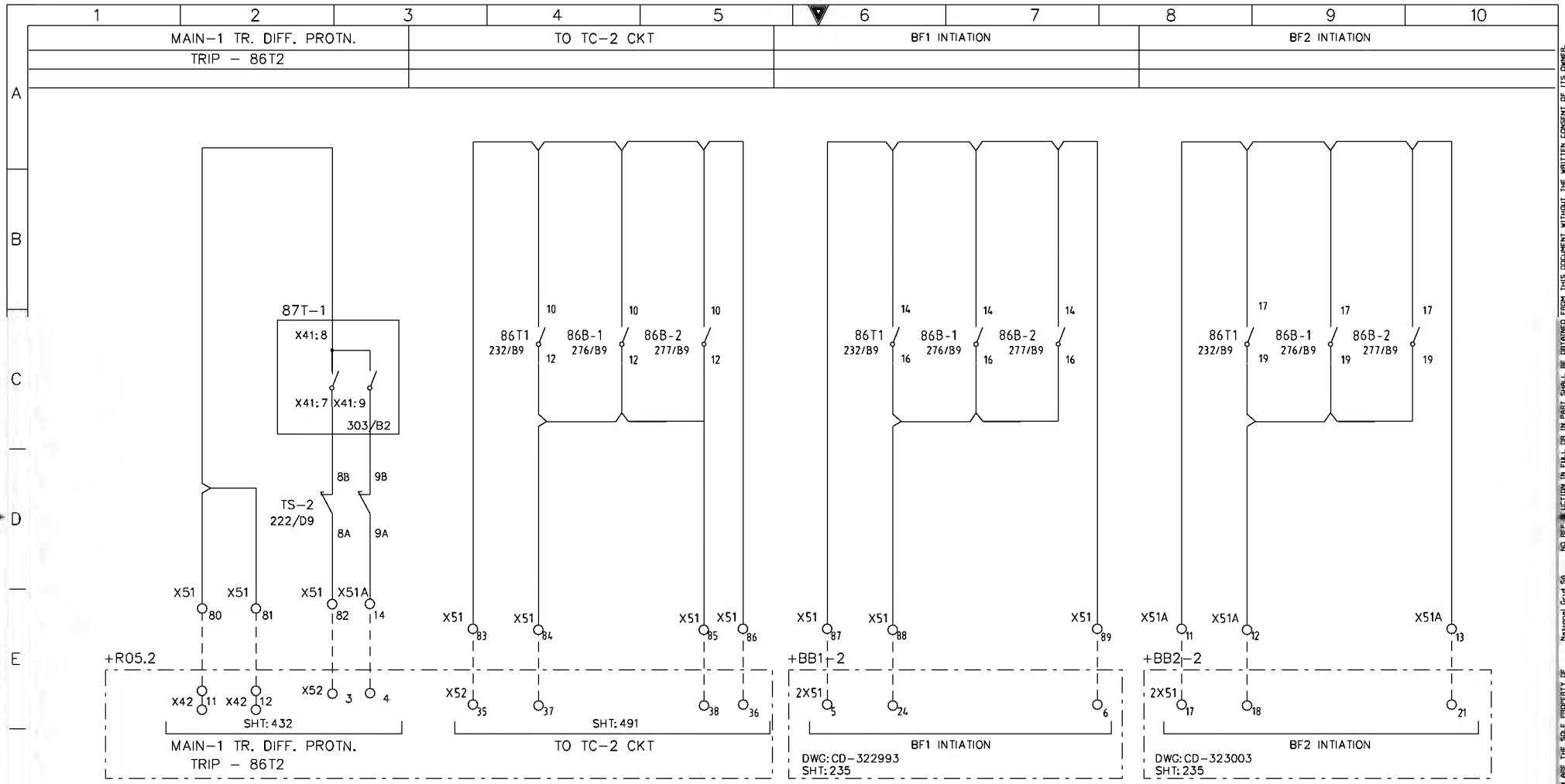

AS-BUILT BY _____ DATE _____	CONTRACT NO. 11131113/00	JOB ORDER NO. S-13656
	DRAWN BY RIZ	CHECKED BY JKR
00 / 13 04 / FOR APPROVAL	DATE STARTED 24.01.2013	DATE COMPLETED _____
REV. NO. / DATE / DESCRIPTION	OPRG. DEPT. CTPD	ENG. DEPT. AUT-PSAC

CONTACTS FOR TRIP CIRCUIT-2 & BF1½

132/13.8kV GT-1 RELAY PANEL-1 +R05.1

S/S 8709-132/13.8KV IN AL-KHARJ CITY

RIYADH SAUDI ARABIA

الشركة الوطنية لنقل الكهرباء

نقل الكهرباء National Grid SA

INDEX	PLANT NO.	DRAWING NUMBER	SHEET NO. SHT	SHEET NO. CONT.	REV. NO.
-	C421	CD-322928	295	296	00

NG/D2-D (2012/01)

DMS | VECTOR | NGD200

THIS DRAWING AND THE INFORMATION CONTAINED HEREIN ARE THE SOLE PROPERTY OF National Grid SA NO REPRODUCTION IN FULL OR IN PART SHALL BE OBTAINED FROM THIS DOCUMENT WITHOUT THE WRITTEN CONSENT OF ITS OWNER.

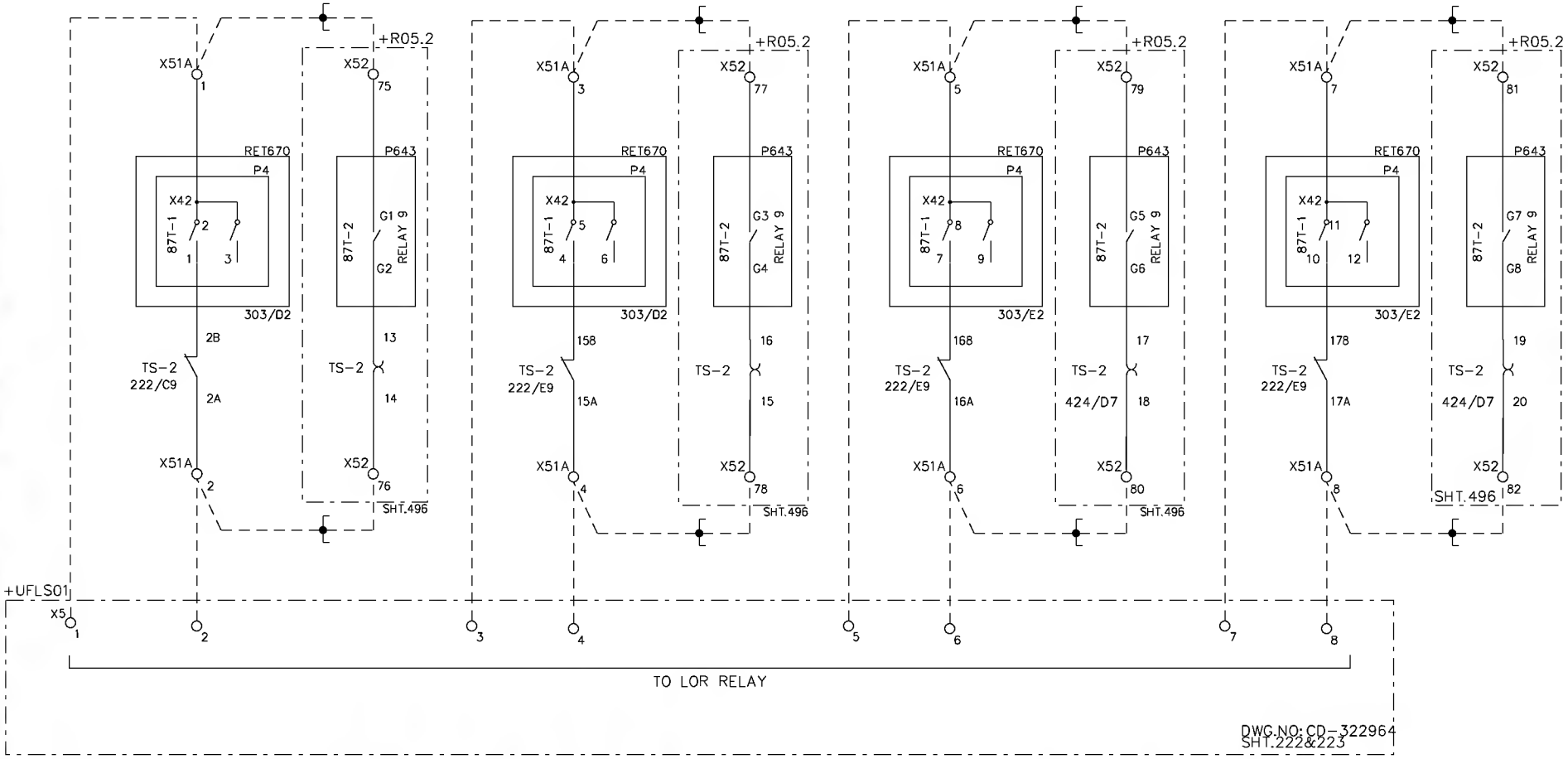

AS-BUILT BY	DATE	CONTRACT NO. 11131113/00	JDB ORDER NO. S-13656
REV. NO.	DATE	DESCRIPTION	
00	13 04	FOR APPROVAL	

DRAWN BY RIZ CHECKED BY JKR
DATE STARTED 24.01.2013 DATE COMPLETED
ORGG. DEPT. CTPD ENG. DEPT. AUT-PSAC

CONTACTS FOR U/F LOAD SHEDDING
132/13.8kV GT-1 RELAY PANEL-1 +R05.1
S/S 8709-132/13.8KV IN AL-KHARJ CITY
RIYADH SAUDI ARABIA

الشركة الوطنية لنقل الكهرباء
نقل الكهرباء
National Grid SA

INDEX	PLANT NO.	DRAWING NUMBER	SHEET NO. SHT	SHEET NO. CONT.	REV. NO.
-	C421	CD-322928	296	298	00

NG/D2-0 (2012/01)
DMS VECTOR NGD200

THIS DRAWING AND THE INFORMATION CONTAINED HEREIN ARE THE SOLE PROPERTY OF National Grid SA NO REPRODUCTION IN FULL OR IN PART SHALL BE OBTAINED FROM THIS DOCUMENT WITHOUT THE WRITTEN CONSENT OF ITS OWNER.

	TRANSF.								
DIFF. PROTN.	R1 DC SUPPLY	RS DC SUPPLY	TC1	86CBF	86B-1	86B-2	94T1	86T1	
MAIN-1 FAULTY	FAILED	FAILED	FAILED	OPTD	OPTD	OPTD	OPTD	OPTD	

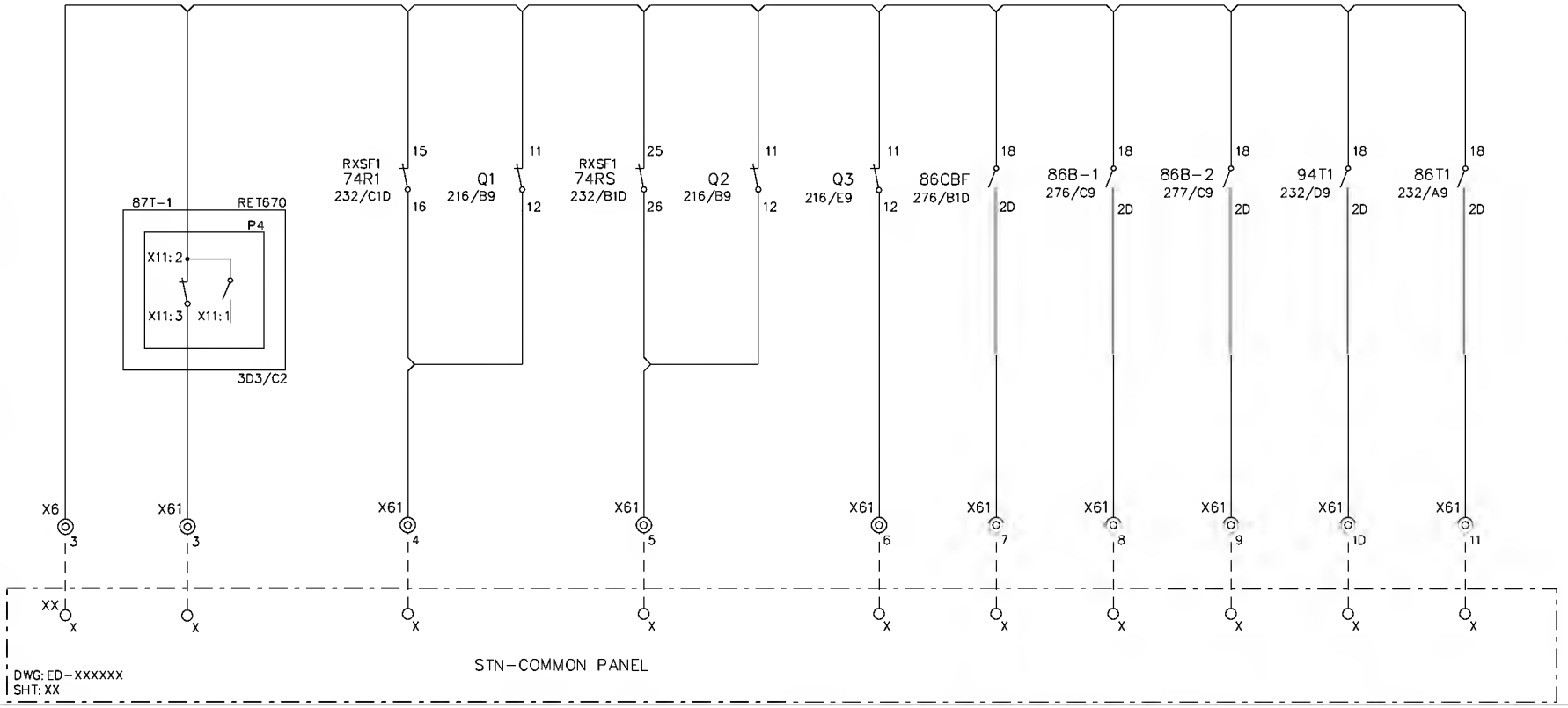

AS-BUILT BY _____ DATE _____ | CONTRACT NO. 11131113/00 | JOB ORDER NO. S-13656

REV. NO.	DATE	DESCRIPTION
00	13 04	FOR APPROVAL

DRAWN BY RIZ CHECKED BY JKR
DATE STARTED 24.01.2013 DATE COMPLETED _____
DPRG. DEPT. CTPD ENG. DEPT. AUT-PSAC

STN-COMMON ALARM CIRCUIT
132/13.8kV GT-1 RELAY PANEL-1 +R05.1
S/S 8709-132/13.8KV IN AL-KHARJ CITY
RIYADH SAUDI ARABIA

الشركة الوطنية لنقل الكهرباء
نقل الكهرباء
National Grid SA

INDEX	PLANT NO.	DRAWING NUMBER	SHEET NO. SHT	SHEET NO. CONT.	REV. NO.
-	C421	CD-322928	298	299	00

NG/D2-D (2012/01)
DMS VECTOR NGD200

THIS DRAWING AND THE INFORMATION CONTAINED HEREIN ARE THE SOLE PROPERTY OF National Grid SA NO REPRODUCTION IN FULL OR IN PART SHALL BE OBTAINED FROM THIS DOCUMENT WITHOUT THE WRITTEN CONSENT OF ITS OWNER.

SPARE CONTACTS

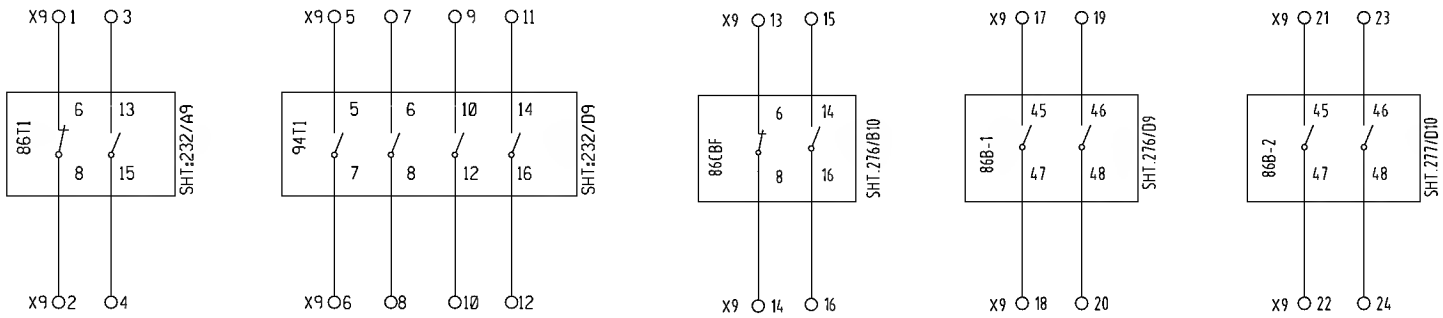

AS-BUILT BY _____ DATE _____	CONTRACT NO. 11131113/00	JOB ORDER NO. S-13656

REV. NO.	DATE	DESCRIPTION
00	13 04	FOR APPROVAL

DRAWN BY RIZ CHECKED BY JKR
DATE STARTED 24.01.2013 DATE COMPLETED _____
ORG. DEPT. CTPD ENG. DEPT. AUT-PSAC

LOR SPARE CONTACTS
132/13.8kV GT-1 RELAY PANEL-1 +R05.1
S/S 8709-132/13.8KV IN AL-KHARJ CITY
RIYADH SAUDI ARABIA

الشركة الوطنية لنقل الكهرباء
نقل الكهرباء
National Grid SA

INDEX	PLANT NO.	DRAWING NUMBER	SHEET NO. SHT	SHEET NO. CONT.	REV. NO.
-	C421	CD-322928	299	301	00

NG/D2-0 (2012/01)
DMS VECTOR NGD200

THIS DRAWING AND THE INFORMATION CONTAINED HEREIN ARE THE SOLE PROPERTY OF National Grid SA NO REPRODUCTION IN FULL OR IN PART SHALL BE OBTAINED FROM THIS DOCUMENT WITHOUT THE WRITTEN CONSENT OF ITS OWNER.

87T-1

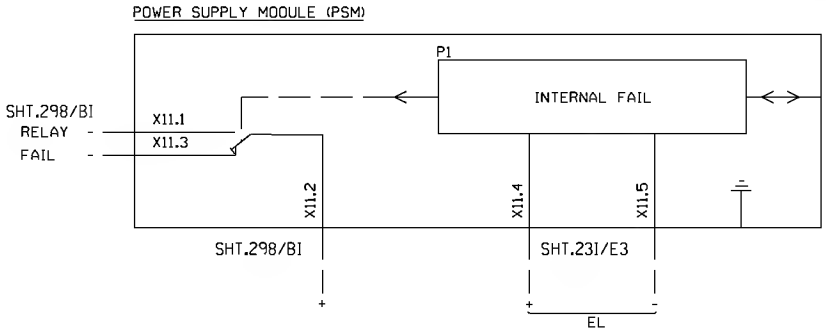

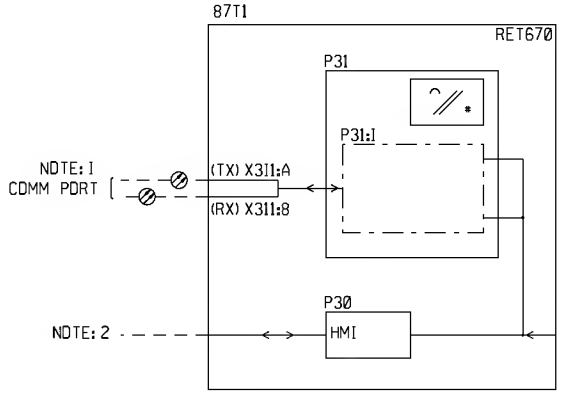

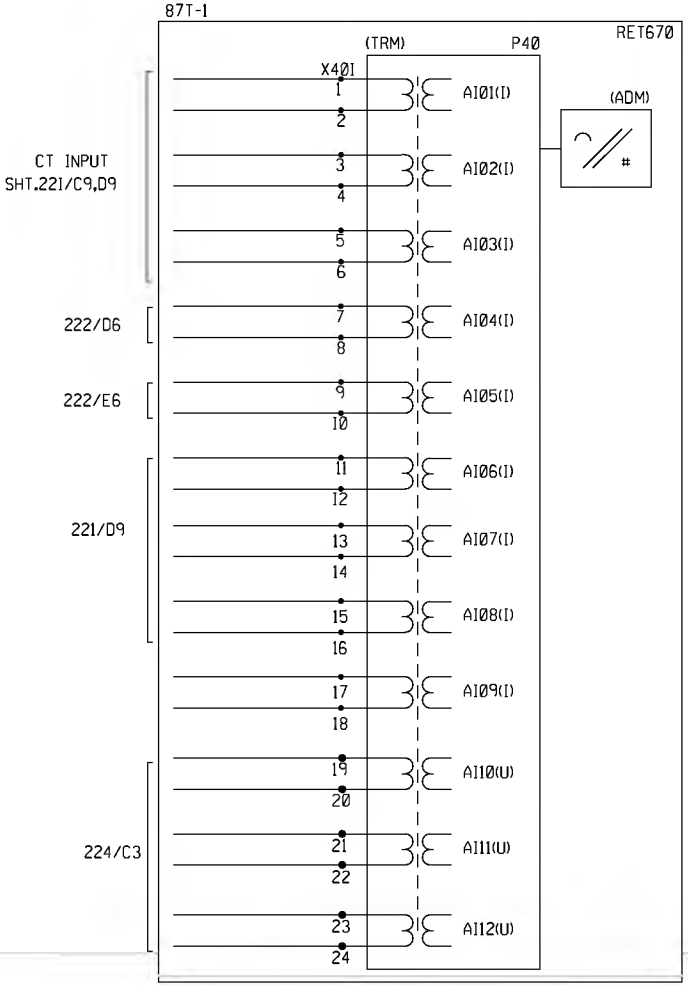

ABBREVIATIONS

TRM	TRANSFORMER INPUT MODULE
ADM	A/D CONVERSION MODULE
PSM	POWER SYPPLY MODULE
IDM	BINARY IN/OUT MODULE
BDM	BINARY OUTPUT MODULE
HMI	HUMAN MACHINE INTERFACE
BIM	BINARY INPUT MODULE

USED FOR TRIP ISOLATION (RTXP-24)

USED FOR VOLTAGE (RTXP-24)

USED FOR CT ISOLATION (RTXP-24)

NOTE:

1. OPTICAL ETHERNET MODULE 2 GLASS INTERFACES - IEC 61850
2. FRONT COMMUNICATION PORT, ETHERNET, RJ45 CONNECTORL

AS-BUILT BY ____ DATE ____	CONTRACT NO. 11131113/00	JOB ORDER NO. S-13656
	DRAWN BY RIZ	CHECKED BY JKR
00 / 13 04 / FOR APPROVAL	DATE STARTED 24.01.2013	DATE COMPLETED ____
REV. NO. / DATE / DESCRIPTION	OPRG. DEPT. CTPD	ENG. DEPT. AUT-PSAC

BLOCK REFERENCE

132/13.8kV GT-1 RELAY PANEL-1 +R05.1

S/S 8709-132/13.8KV IN AL-KHARJ CITY

RIYADH SAUDI ARABIA

الشركة الوطنية لنقل الكهرباء

نقل الكهرباء National Grid SA

INDEX	PLANT NO.	DRAWING NUMBER	SHEET NO. SHT	SHEET NO. CONT.	REV. NO.
-	C421	CD-322928	301	302	00

NG/D2-0 (2012/01)

OMS | VECTOR | NGD200

THIS DRAWING AND THE INFORMATION CONTAINED HEREIN ARE THE SOLE PROPERTY OF National Grid SA NO REPRODUCTION IN FULL OR IN PART SHALL BE OBTAINED FROM THIS DOCUMENT WITHOUT THE WRITTEN CONSENT OF ITS OWNER.

BINARY INPUT CARD

B7T-1 — BIM P3 RET670

				LOCATION=P3 PLANT ADAPTED CONFIGURATION
SHT.227/E3	X31	1	BI.01	VT MCB FAIL
		2		
		3	BI.02	SPARE
		4		
		5	BI.03	SPARE
		6		
		7	BI.04	SPARE
		8		
		9	BI.05	SPARE
		10		
		11	BI.06	SPARE
		12		
		13	BI.07	CBF1 INITIATION
		14		
		15	BI.08	SPARE
		16		
SHT.228/E4	X32	1	BI.09	SPARE
		2		
		3	BI.10	SPARE
		4		
		5	BI.11	SPARE
		6		
		7	BI.12	SPARE
		8		
		9	BI.13	SPARE
		10		
		11	BI.14	SPARE
		12		
		13	BI.15	SPARE
		14		
		15	BI.16	SPARE
		16		

BINARY INPUT CARD

B7T-1 — BIM P5 RET670

				LOCATION=P6 PLANT ADAPTED CONFIGURATION
SHT.228/E8	X51	1	BI.01	SPARE
		2		
		3	BI.02	SPARE
		4		
		5	BI.03	SPARE
		6		
		7	BI.04	SPARE
		8		
		9	BI.05	SPARE
		10		
		11	BI.06	SPARE
		12		
		13	BI.07	SPARE
		14		
		15	BI.08	SPARE
		16		
SHT.291/C9,C10	X52	1	BI.09	SPARE
		2		
		3	BI.10	SPARE
		4		
		5	BI.11	SPARE
		6		
		7	BI.12	SPARE
		8		
		9	BI.13	SPARE
		10		
		11	BI.14	SPARE
		12		
		13	BI.15	SPARE
		14		
		15	BI.16	SPARE
		16		

AS-BUILT BY _____ DATE _____ | CONTRACT NO. 11131113/00 | JOB ORDER NO. S-13656

REV. NO.	DATE	DESCRIPTION
00	13 04	FOR APPROVAL

DRAWN BY RIZ CHECKED BY JKR
DATE STARTED 24.01.2013 DATE COMPLETED _____
OPRG. DEPT. CTPD ENG. DEPT. AUT-PSAC

BLOCK REFERENCE
132/13.8kV GT-1 RELAY PANEL-1 +R05.1
S/S 8709-132/13.8KV IN AL-KHARJ CITY
RIYADH SAUDI ARABIA

الشركة الوطنية لنقل الكهرباء
نقل الكهرباء National Grid SA

INDEX	PLANT NO.	DRAWING NUMBER	SHEET NO. SHT	SHEET NO. CONT.	REV. NO.
-	C421	CD-322928	302	303	00

NG/D2-D (2012/01)
DMS VECTOR NGD200

THIS DRAWING AND THE INFORMATION CONTAINED HEREIN ARE THE SOLE PROPERTY OF National Grid SA NO REPRODUCTION IN FULL OR IN PART SHALL BE OBTAINED FROM THIS DOCUMENT WITHOUT THE WRITTEN CONSENT OF ITS OWNER.

BINARY OUTPUT CARD

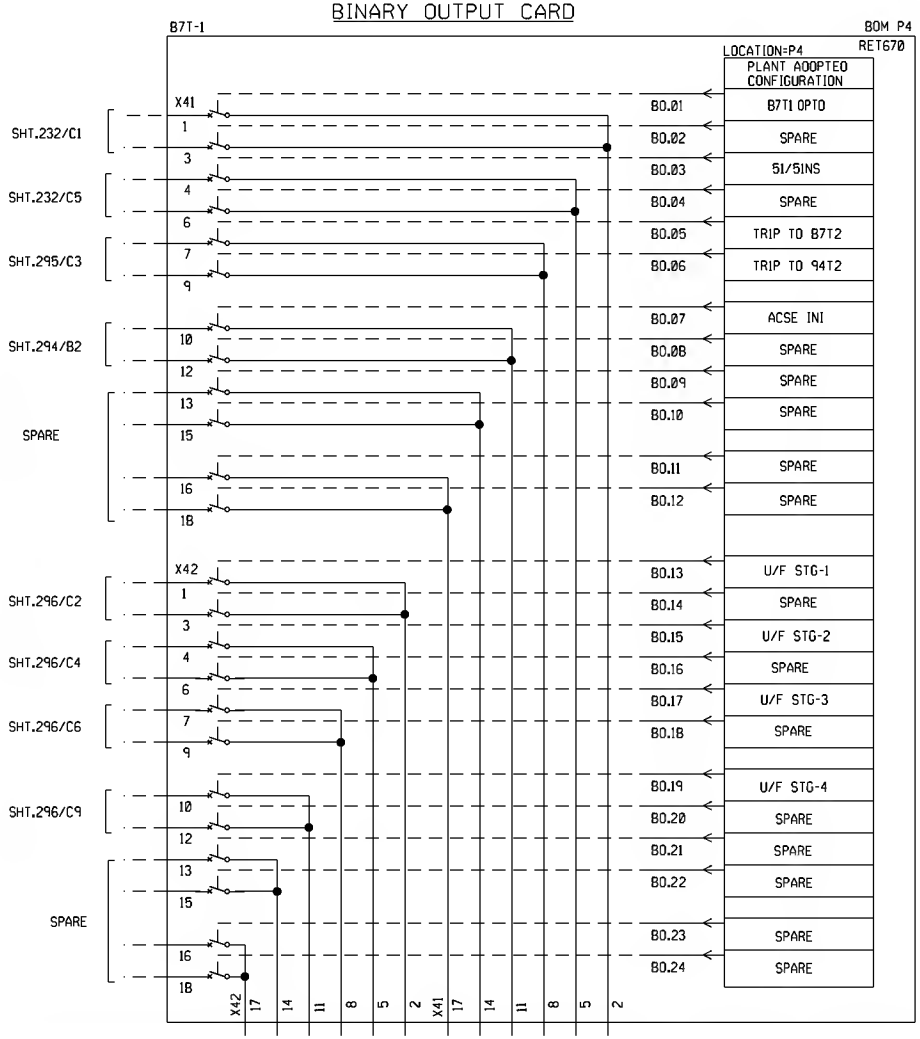

AS-BUILT BY _____ DATE _____	CONTRACT NO. 11131113/00	JOB ORDER NO. S-13656
	DRAWN BY RIZ CHECKED BY JKR	
00 / 13 04 / FOR APPROVAL	DATE STARTED 24.01.2013 DATE COMPLETED _____	
REV. NO. / DATE / DESCRIPTION	OPRG. DEPT. CTPD ENG. DEPT. AUT-PSAC	

BLOCK REFERENCE

132/13.8kV GT-1 RELAY PANEL-1 +R05.1

S/S 8709-132/13.8KV IN AL-KHARJ CITY

RIYADH SAUDI ARABIA

الشركة الوطنية لنقل الكهرباء

نقل الكهرباء National Grid SA

INDEX	PLANT NO.	DRAWING NUMBER	SHEET NO. SHT	SHEET NO. CONT.	REV. NO.
-	C421	CD-322928	303	304	00

NG/D2-0 (2012/01)

DMS VECTOR NGD200

THIS DRAWING AND THE INFORMATION CONTAINED HEREIN ARE THE SOLE PROPERTY OF National Grid SA NO REPRODUCTION IN FULL OR IN PART SHALL BE OBTAINED FROM THIS DOCUMENT WITHOUT THE WRITTEN CONSENT OF ITS OWNER.

REFERENCE	X1 CT CKTS.
221/A5	1
221/B5	2
221/B5	3
221/B5	4
221/B5	5
221/B5	6
221/B5	7
221/B5	8
221/B5	9
SPARE	10
221/E5	11
221/E5	12
221/E5	13
221/E5	14
221/E5	15
221/F5	16
221/F5	17
221/F5	18
221/F5	19
222/C4	20
222/C4	21
222/D4	22
222/D4	23
222/D4	24
222/D4	25
222/E4	26
222/E4	27
222/E4	28
222/E4	29
SPARE	30
223/E5	31
223/E5	32
223/D5	33
223/D5	34
223/D5	35
SPARE	36
SPARE	37
SPARE	38
SPARE	39
SPARE	40
SPARE	41
SPARE	42
SPARE	43
SPARE	44
SPARE	45
SPARE	46
SPARE	47
SPARE	48
SPARE	49
SPARE	50

REFERENCE	X2 CT CKTS.
224/C6	1
224/C6	2
224/C6	3
224/D6	4
SPARE	5

REFERENCE	X3 AC CKTS.
211/A3	1
211/B3	2
211/A3	3
211/C3	4
211/B3	5
211/C3	6
211/B3	7
211/C3	8
SPARE	9
SPARE	10

REFERENCE	X9 SPARE CKT.
299/B2	1
299/D2	2
299/B3	3
299/D3	4
299/B4	5
299/D4	6
299/B4	7
299/D4	8
299/B4	9
299/D4	10
299/B5	11
299/D5	12
299/B6	13
299/D6	14
299/B6	15
299/D6	16
299/B7	17
299/D7	18
299/B8	19
299/D8	20
299/B9	21
299/D9	22
299/B9	23
299/D9	24
SPARE	25
SPARE	26
SPARE	27
SPARE	28
SPARE	29
SPARE	30

REFERENCE	XTJ T.JACK
211/D4	1
211/D4	2
211/D4	3
211/D4	4
SPARE	5

REFERENCE	X61 ALARM CKT.
212/B3	1
212/C3	2
298/E2	3
298/E3	4
298/E5	5
298/E5	6
298/E6	7
298/E7	8
298/E7	9
SPARE	10
SPARE	11
SPARE	12
SPARE	13
SPARE	14
SPARE	15
SPARE	16
SPARE	17
SPARE	18
SPARE	19
SPARE	20

REFERENCE	X41 DC CKTS.
216/B3	1
216/B3	2
216/D3	3
216/D3	4
216/D7	5
216/D7	6
216/D7	7
216/D7	8
SPARE	9
SPARE	10
227/B4	11
227/B4	12
228/B10	13
232/B3	14
232/B5	15
SPARE	16
SPARE	17
SPARE	18
SPARE	19
SPARE	20

REFERENCE	X51A CONTROL & PROT. CKTS
296/B2	1
296/E2	2
296/B4	3
296/E4	4
296/B6	5
296/E6	6
296/B9	7
296/E9	8
SPARE	9
SPARE	10
295/E8	11
295/E8	12
295/E10	13
295/E3	14
SPARE	15
SPARE	16
SPARE	17
SPARE	18
SPARE	19
SPARE	20

REFERENCE	X51 CONTROL & PROT. CKTS
216/E7	1
216/E7	2
232/D3	3
232/D4	4
232/D5	5
232/D6	6
SPARE	7
SPARE	8
SPARE	9
SPARE	10
SPARE	11
SPARE	12
SPARE	13
SPARE	14
276/A2	15
276/F2	16
276/A8	17
276/F8	18
276/A2	19
276/E2	20
276/A4	21
276/E4	22
276/A5	23
276/E5	24
277/A4	25
277/F4	26
277/A7	27
277/F7	28
277/A5	29
277/E5	30
291/A4	31
291/C4	32
291/D4	33
291/E4	34
291/B7	35
291/C7	36
291/B7	37
291/C7	38
291/A8	39
291/B8	40
291/A9	41
291/B9	42
SPARE	43
292/A7	44
292/A9	45
292/B7	46
293/E1	47
293/E2	48
293/E3	49
293/E4	50

REFERENCE	X51 CONTROL & PROT. CKTS
293/E4	51
293/E6	52
293/E7	53
293/B6	54
293/D6	55
293/B6	56
293/D6	57
293/E9	58
293/E9	59
293/E10	60
293/B9	61
293/E9	62
294/E1	63
294/E2	64
294/E3	65
294/B2	66
294/D2	67
294/B3	68
294/B6	69
294/D6	70
294/B7	71
294/E4	72
294/E4	73
294/E7	74
294/B10	75
294/D10	76
294/E9	77
294/E9	78
294/E10	79
295/E2	80
295/E2	81
295/E3	82
295/E3	83
295/E4	84
295/E5	85
295/E5	86
295/E6	87
295/E6	88
295/E7	89
SPARE	90
SPARE	91
SPARE	92
SPARE	93
SPARE	94
SPARE	95
SPARE	96
SPARE	97
SPARE	98
SPARE	99
SPARE	

REFERENCE	X53 CONTROL & PROT. CKTS
227/D4	1
227/D4	2
227/D4	3
227/D5	4
227/D5	5
227/D5	6
227/D6	7
227/D6	8
SPARE	9
SPARE	10
228/D2	11
228/D2	12
228/D2	13
228/D3	14
228/D3	15
228/D3	16
228/D4	17
228/D4	18
228/D5	19
228/D5	20
228/D5	21
228/D6	22
228/D6	23
228/D6	24
228/D7	25
228/D7	26
228/D8	27
228/D8	28
228/D8	29
228/D9	30
228/D9	31
228/D9	32
SPARE	33
SPARE	34
SPARE	35

REFERENCE	X6 ALM. CKT.
212/B3	1
212/B3	2
298/E1	3

REFERENCE	XSH SPACE HEATER
211/C4	1
211/D4	2
SPARE	3

AS-BUILT BY _____ DATE _____ | CONTRACT NO. 11131113/00 | JOB ORDER NO. S-13656

REV. NO.	DATE	DESCRIPTION
00	13 04	FOR APPROVAL

DRAWN BY RIZ CHECKED BY JKR

DATE STARTED 24.01.2013 DATE COMPLETED _____

DPRG. DEPT. CTPD ENG. DEPT. AUT-PSAC

TERMINAL BLOCK REFERENCE

132/13.8kV GT-1 RELAY PANEL-1 +R05.1

S/S 8709-132/13.8KV IN AL-KHARJ CITY

RIYADH SAUDI ARABIA

الشركة الوطنية لنقل الكهرباء

نقل الكهرباء National Grid SA

INDEX	PLANT NO.	DRAWING NUMBER	SHEET NO. SHT	SHEET NO. CONT.	REV. NO.
-	C421	CD-322928	304	411	00

NG/D2-0 (2012/01)

DMS VECTOR NGD200

THIS DRAWING AND THE INFORMATION CONTAINED HEREIN ARE THE SOLE PROPERTY OF National Grid SA NO REPRODUCTION IN FULL OR IN PART SHALL BE OBTAINED FROM THIS DOCUMENT WITHOUT THE WRITTEN CONSENT OF ITS OWNER.

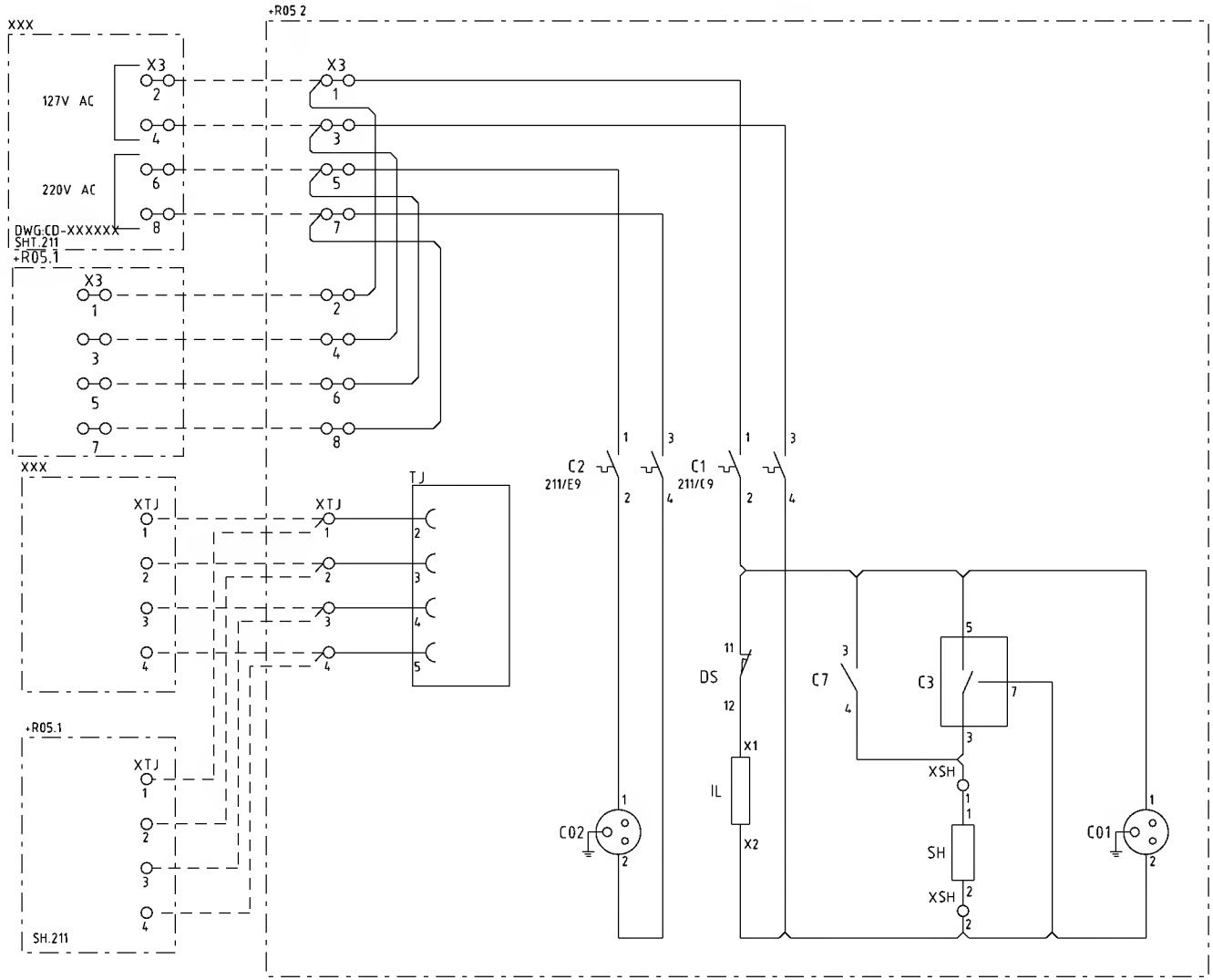

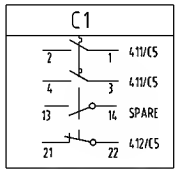

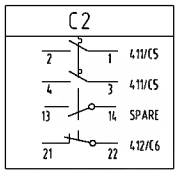

AS-BUILT BY _____ DATE _____	CONTRACT NO. 11131113/00	JOB ORDER NO. S-13656	AC SUPPLY FOR ILLUMINATION & POWER SOCKET	الشركة الوطنية لنقل الكهرباء — نقل الكهرباء National Grid SA
	DRAWN BY RIZ	CHECKED BY JKR	132/13.8kV GT-1 RELAY PANEL-2 +R05.2	
00 / 13 04 / FOR APPROVAL	DATE STARTED 24.01.2013	DATE COMPLETED	S/S 8709-132/13.8KV IN AL-KHARJ CITY	INDEX: - / PLANT NO.: C421 / DRAWING NUMBER: CD-322928 / SHEET NO. SHT 411 CONT. 412 / REV. NO. 00
REV. NO. / DATE / DESCRIPTION	ORIG. DEPT. CTPD	ENG. DEPT. AUT-PSAC	RIYADH SAUDI ARABIA	

NG/D2-D (2012/01)

DMS | VECTOR | NGD200

THIS DRAWING AND THE INFORMATION CONTAINED HEREIN ARE THE SOLE PROPERTY OF National Grid SA NO REPRODUCTION IN FULL OR IN PART SHALL BE OBTAINED FROM THIS DOCUMENT WITHOUT THE WRITTEN CONSENT OF ITS OWNER.

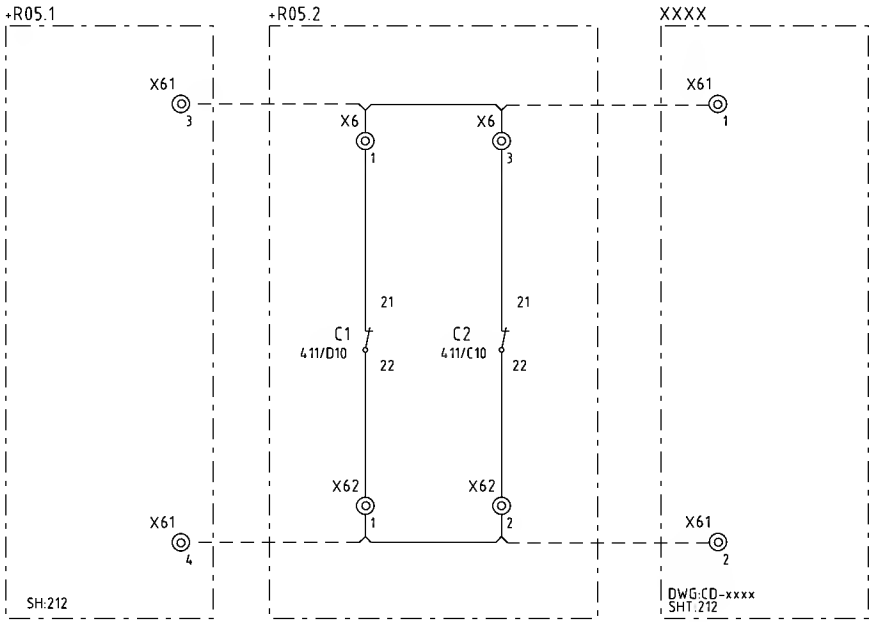

AS-BUILT BY _____ DATE _____	CONTRACT NO. 11131113/00	JOB ORDER NO. S-13656	CUB.LIGHTING,HEATER&SOKET ALARM CKT.	الشركة الوطنية لنقل الكهرباء — نقل الكهرباء National Grid SA
	DRAWN BY RIZ	CHECKED BY JKR	132/13.8kV GT-1 RELAY PANEL-2 +R05.2	
00 / 13 04 / FOR APPROVAL	DATE STARTED 24.01.2013	DATE COMPLETED _____	S/S 8709-132/13.8KV IN AL-KHARJ CITY	INDEX - / PLANT NO. C421 / DRAWING NUMBER CD-322928 / SHEET NO. SHT 412 CONT. 416 / REV. NO. 00
REV. NO. / DATE / DESCRIPTION	ORG. DEPT. CTPD	ENG. DEPT. AUT-PSAC	RIYADH SAUDI ARABIA	

NG/D2-0 (2012/01)

DMS | VECTOR | NGD200

THIS DRAWING AND THE INFORMATION CONTAINED HEREIN ARE THE SOLE PROPERTY OF National Grid SA NO REPRODUCTION IN FULL OR IN PART SHALL BE OBTAINED FROM THIS DOCUMENT WITHOUT THE WRITTEN CONSENT OF ITS OWNER.

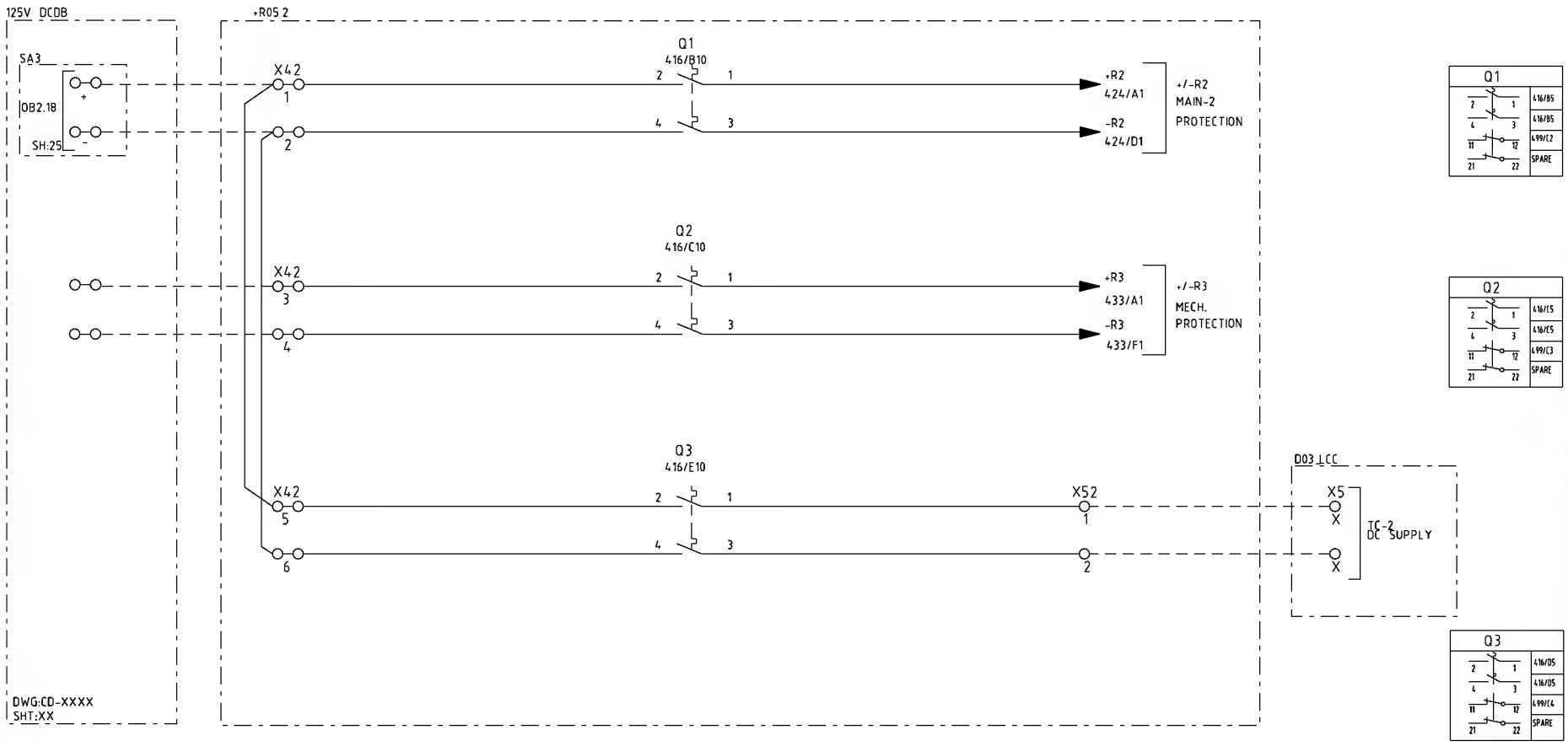

AS-BUILT BY _____ DATE _____	CONTRACT NO. 11131113/00	JOB ORDER NO. S-13656
REV. NO. / DATE / DESCRIPTION	DRAWN BY RIZ CHECKED BY JKR	DC SUPPLY DISTRIBUTION
00 / 13 04 / FOR APPROVAL	DATE STARTED 24.01.2013 DATE COMPLETED _____	132/13.8kV GT-1 RELAY PANEL-2 +R05.2
	ORG. DEPT. CTPD ENG. DEPT. AUT-PSAC	S/S 8709-132/13.8KV IN AL-KHARJ CITY
		RIYADH SAUDI ARABIA

الشركة الوطنية لنقل الكهرباء
نقل الكهرباء
National Grid SA

INDEX	PLANT NO.	DRAWING NUMBER	SHEET NO. SHT	SHEET NO. CONT.	REV. NO.
-	C421	CD-322928	416	421	00

NG/D2-0 (2012/01)
DMS VECTOR NGD200

THIS DRAWING AND THE INFORMATION CONTAINED HEREIN ARE THE SOLE PROPERTY OF National Grid SA NO REPRODUCTION IN FULL OR IN PART SHALL BE OBTAINED FROM THIS DOCUMENT WITHOUT THE WRITTEN CONSENT OF ITS OWNER.

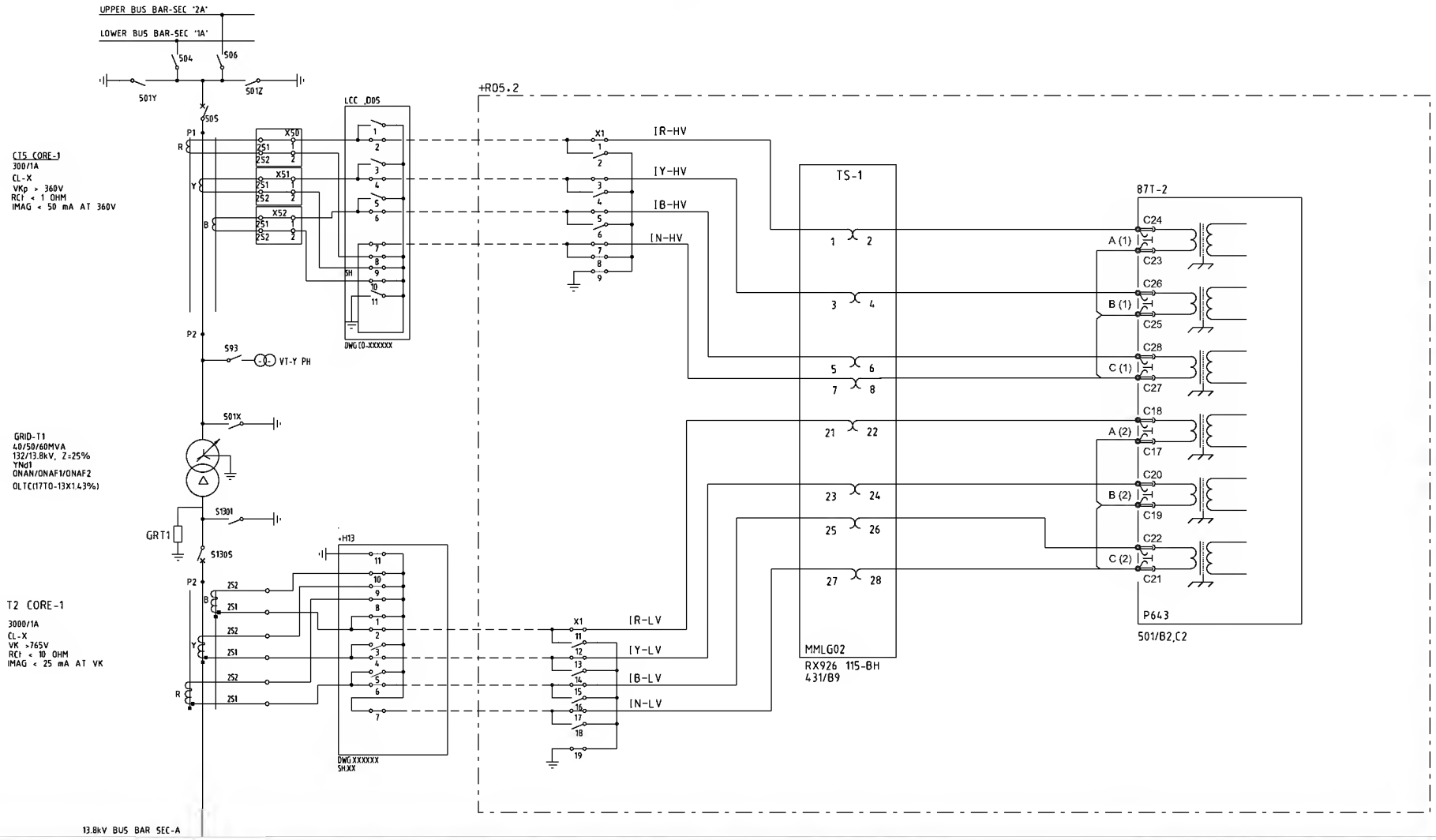

AS-BUILT BY _____ DATE _____	CONTRACT NO. 11131113/00	JOB ORDER NO. S-13656
	DRAWN BY RIZ	CHECKED BY JKR
	DATE STARTED 24.01.2013	DATE COMPLETED _____
	OPRG. DEPT. CTPD	ENG. DEPT. AUT-PSAC

REV. NO.	DATE	DESCRIPTION
00	13 04	FOR APPROVAL

CT CIRCUITS 87T-2 RELAY

132/13.8kV GT-1 RELAY PANEL-2 +R05.2

S/S 8709-132/13.8KV IN AL-KHARJ CITY

RIYADH SAUDI ARABIA

الشركة الوطنية لنقل الكهرباء

نقل الكهرباء
National Grid SA

INDEX	PLANT NO.	DRAWING NUMBER	SHEET NO. SHT	SHEET NO. CONT.	REV. NO.
-	C421	CD-322928	421	422	00

NG/D2-0 (2012/01)

DMS | VECTOR | NGD200

THIS DRAWING AND THE INFORMATION CONTAINED HEREIN ARE THE SOLE PROPERTY OF National Grid SA NO REPRODUCTION IN FULL OR IN PART SHALL BE OBTAINED FROM THIS DOCUMENT WITHOUT THE WRITTEN CONSENT OF ITS OWNER.

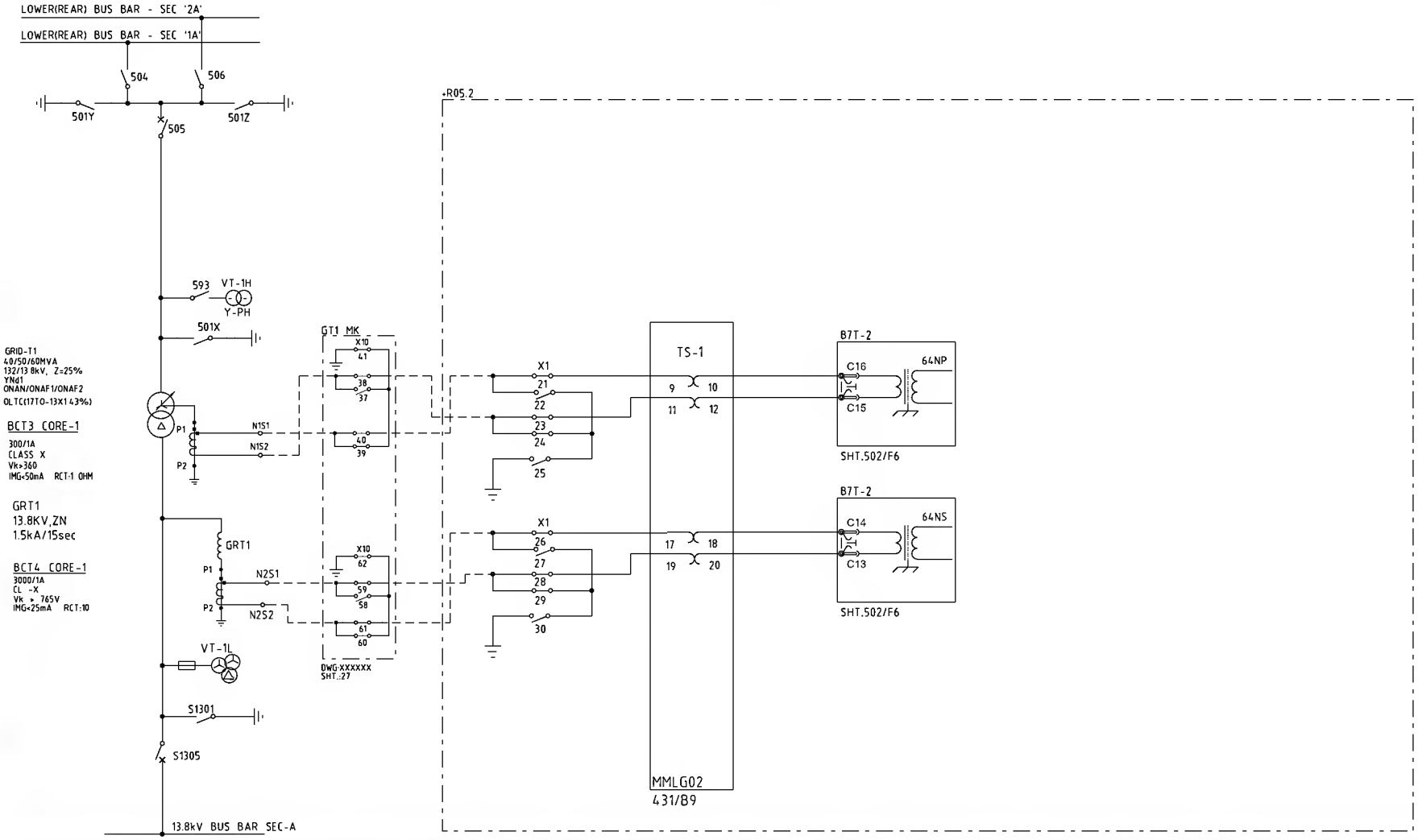

AS-BUILT BY _____ DATE _____	CONTRACT NO. 11131113/00	JOB ORDER NO. S-13656
DRAWN BY RIZ	CHECKED BY JKR	
DATE STARTED 24.01.2013	DATE COMPLETED	
OPRG. DEPT. CTPD	ENG. DEPT. AUT-PSAC	

REV. NO.	DATE	DESCRIPTION
00	13 04	FOR APPROVAL

CT CIRCUITS 87T-2 RELAY

132/13.8kV GT-1 RELAY PANEL-2 +R05.2

S/S 8709-132/13.8KV IN AL-KHARJ CITY

RIYADH SAUDI ARABIA

الشركة الوطنية لنقل الكهرباء

نقل الكهرباء
National Grid SA

INDEX	PLANT NO.	DRAWING NUMBER	SHEET NO. SHT	SHEET NO. CONT.	REV. NO.
-	C421	CD-322928	422	423	00

NG/D2-0 (2012/01)

DMS VECTOR NGD200

THIS DRAWING AND THE INFORMATION CONTAINED HEREIN ARE THE SOLE PROPERTY OF National Grid SA NO REPRODUCTION IN FULL OR IN PART SHALL BE OBTAINED FROM THIS DOCUMENT WITHOUT THE WRITTEN CONSENT OF ITS OWNER.

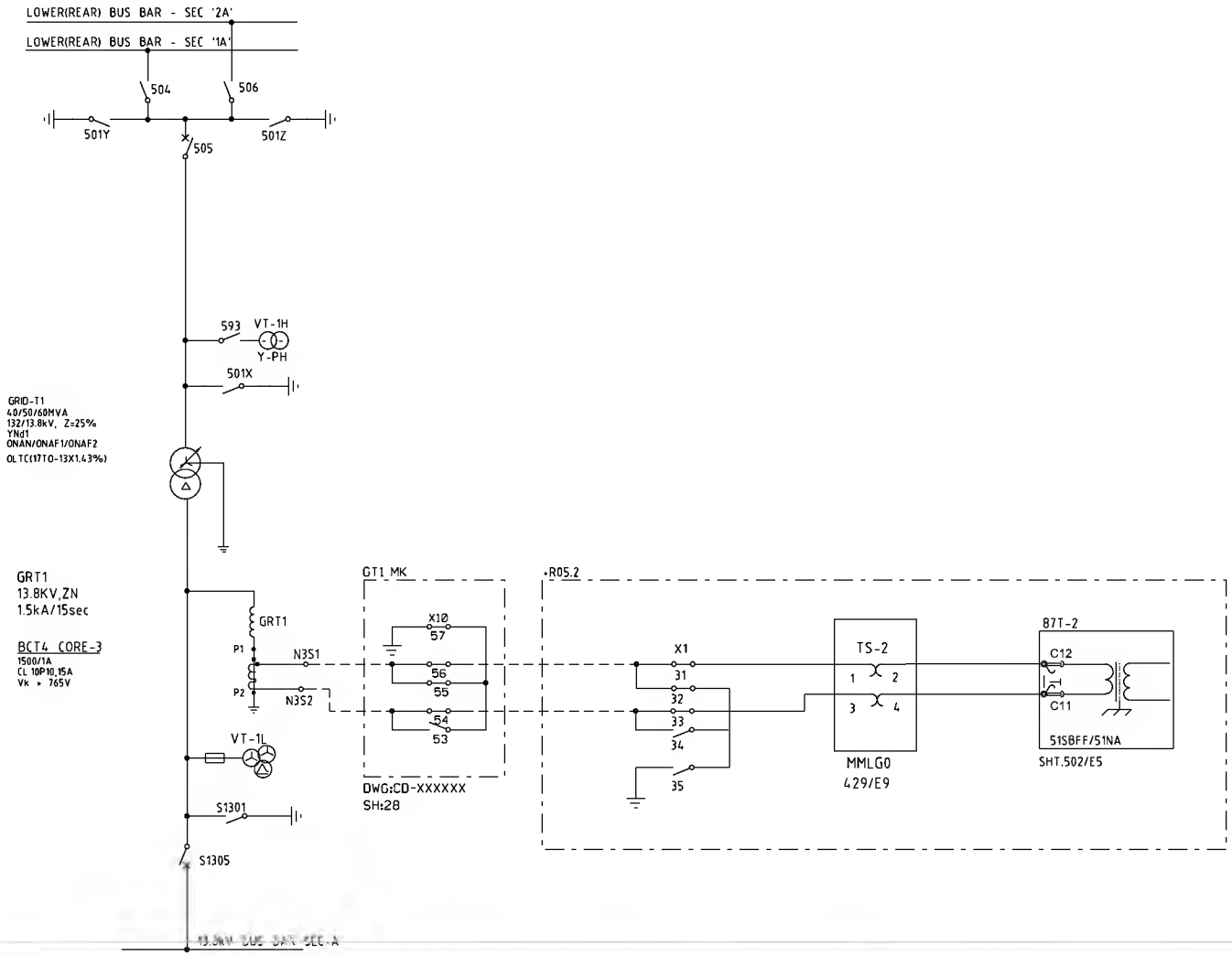

AS-BUILT BY _____ DATE _____	CONTRACT NO. 11131113/00	JOB ORDER NO. S-13656	CT CIRCUITS 87T-2 RELAY	الشركة الوطنية لنقل الكهرباء — نقل الكهرباء National Grid SA
	DRAWN BY RIZ	CHECKED BY JKR	132/13.8kV GT-1 RELAY PANEL-2 +R05.2	
00 / 13 04 / FOR APPROVAL	DATE STARTED 24.01.2013	DATE COMPLETED	S/S 8709-132/13.8KV IN AL-KHARJ CITY	INDEX - / PLANT NO. C421 / DRAWING NUMBER CD-322928 / SHEET NO. SHT 423 CONT. 424 / REV. NO. 00
REV. NO. / DATE / DESCRIPTION	ORIG. DEPT. CTPD	ENG. DEPT. AUT-PSAC	RIYADH SAUDI ARABIA	

NG/D2-0 (2012/01)

DMS | VECTOR | NGD200

THIS DRAWING AND THE INFORMATION CONTAINED HEREIN ARE THE SOLE PROPERTY OF National Grid SA NO REPRODUCTION IN FULL OR IN PART SHALL BE OBTAINED FROM THIS DOCUMENT WITHOUT THE WRITTEN CONSENT OF ITS OWNER.

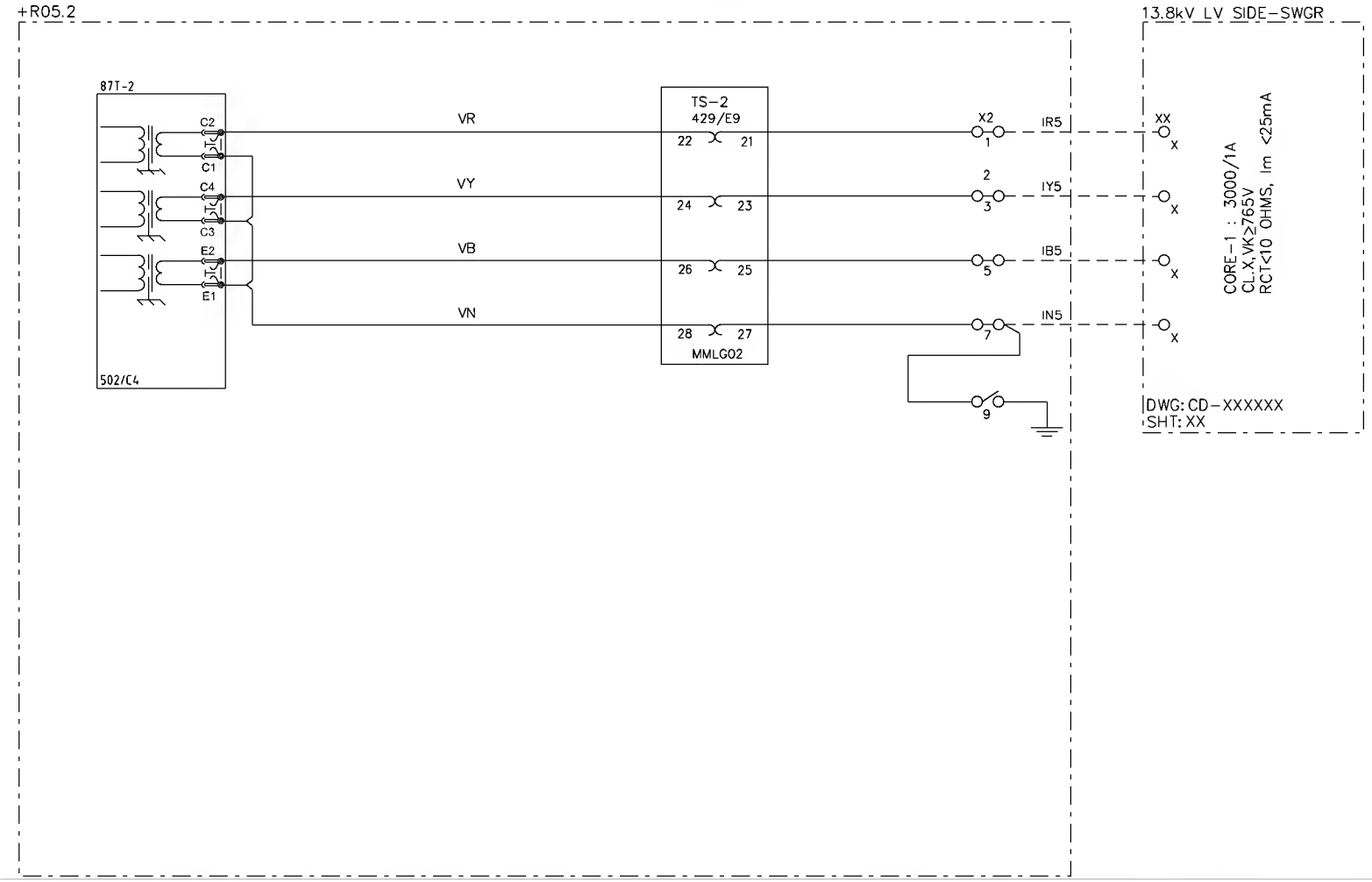

AS-BUILT BY _____ DATE _____	CONTRACT NO. 11131113/00	JOB ORDER NO. S-13656	CT & VT CIRCUITS 87T-2 RELAY	الشركة الوطنية لنقل الكهرباء — نقل الكهرباء National Grid SA
	DRAWN BY RIZ	CHECKED BY JKR	132/13.8kV GT-1 RELAY PANEL-2 +R05.2	
00 / 13 04 / FOR APPROVAL	DATE STARTED 24.01.2013	DATE COMPLETED	S/S 8709-132/13.8KV IN AL-KHARJ CITY	INDEX - / PLANT NO. C421 / DRAWING NUMBER CD-322928 / SHEET NO. SHT 424 CONT. 429 / REV. NO. 00
REV. NO. / DATE / DESCRIPTION	ORIG. DEPT. CTPD	ENG. DEPT. AUT-PSAC	RIYADH SAUDI ARABIA	

NG/D2-0 (2012/01)

DMS | VECTOR | NGD200

THIS DRAWING AND THE INFORMATION CONTAINED HEREIN ARE THE SOLE PROPERTY OF National Grid SA NO REPRODUCTION IN FULL OR IN PART SHALL BE OBTAINED FROM THIS DOCUMENT WITHOUT THE WRITTEN CONSENT OF ITS OWNER.

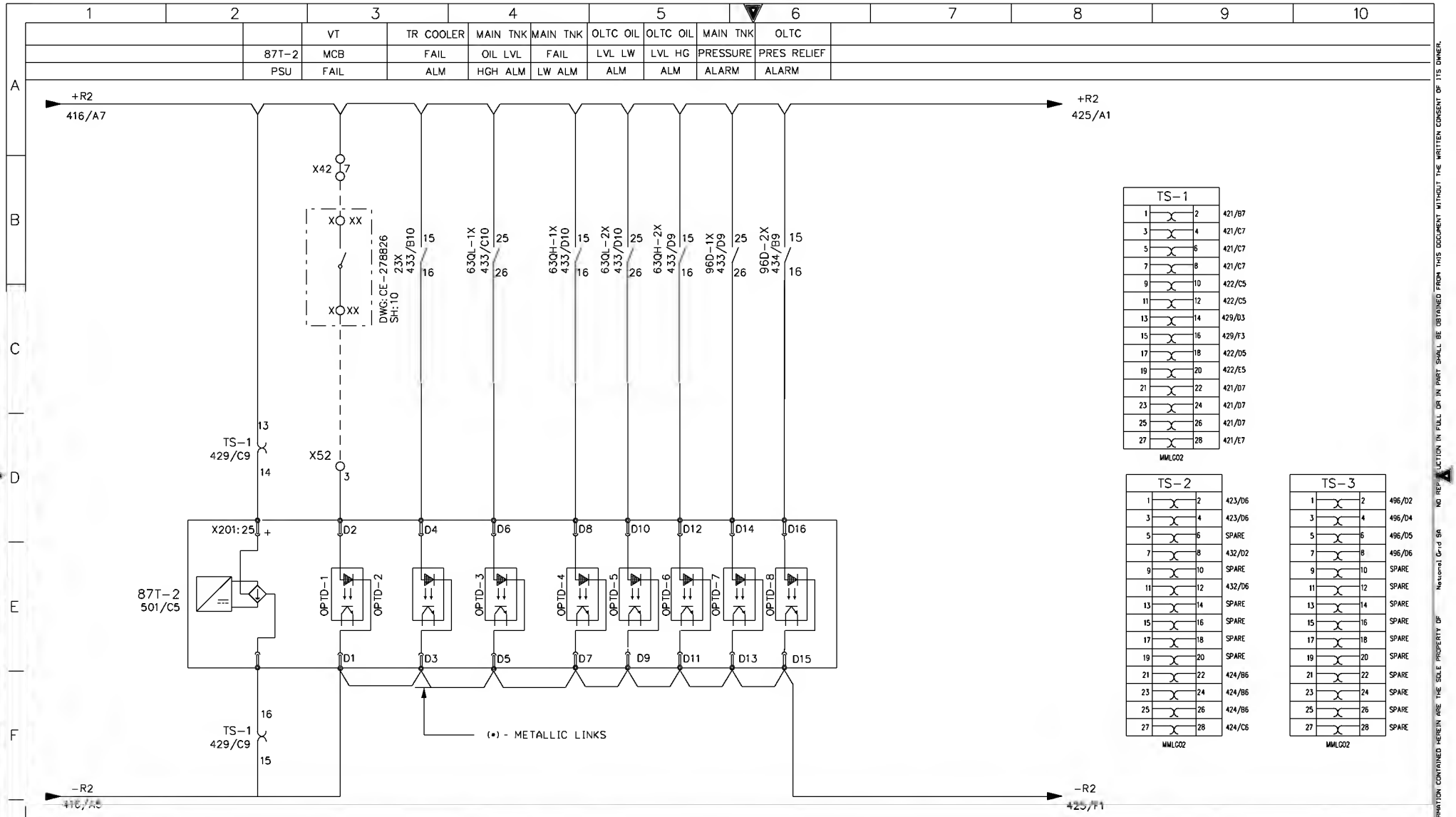

AS-BUILT BY _____ DATE _____	CONTRACT NO. 11131113/00	JOB ORDER NO. S-13656

REV. NO.	DATE	DESCRIPTION
00	13 04	FOR APPROVAL

DRAWN BY RIZ CHECKED BY JKR
DATE STARTED 24.01.2013 DATE COMPLETED _____
ORGG. DEPT. CTPD ENG. DEPT. AUT-PSAC

87T-2 BINARY INPUTS

132/13.8kV GT-1 RELAY PANEL-2 +R05.2

S/S 8709-132/13.8KV IN AL-KHARJ CITY

RIYADH SAUDI ARABIA

الشركة الوطنية لنقل الكهرباء

نقل الكهرباء
National Grid SA

INDEX	PLANT NO.	DRAWING NUMBER	SHEET NO. SHT	SHEET NO. CONT.	REV. NO.
-	C421	CD-322928	429	430	00

NG/D2-D (2012/01)

DMS VECTOR NGD200

THIS DRAWING AND THE INFORMATION CONTAINED HEREIN ARE THE SOLE PROPERTY OF National Grid SA NO REPRODUCTION IN FULL OR IN PART SHALL BE OBTAINED FROM THIS DOCUMENT WITHOUT THE WRITTEN CONSENT OF ITS OWNER.

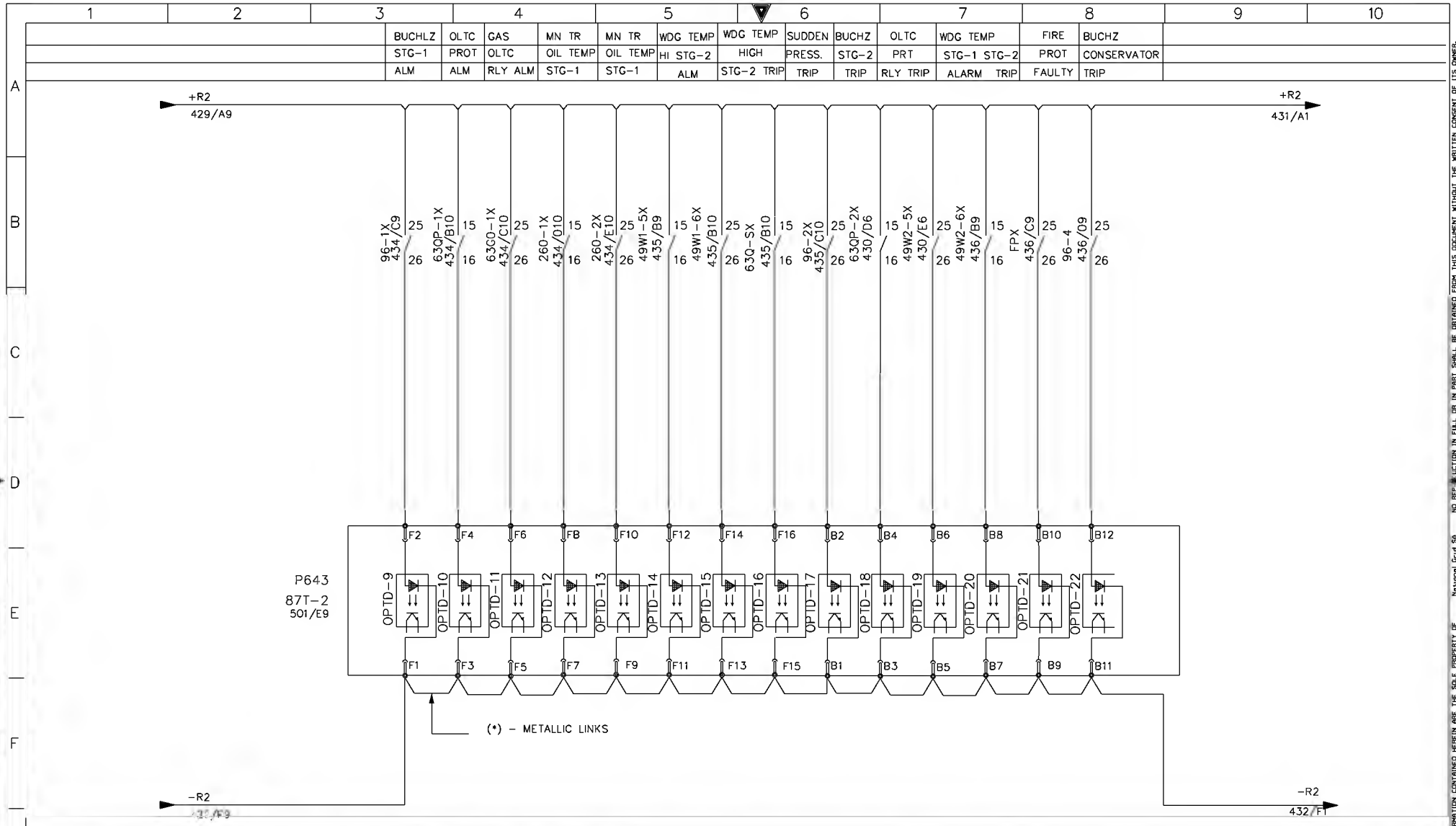

AS-BUILT BY _____ DATE _____	CONTRACT NO. 11131113/00	JOB ORDER NO. S-13656
DRAWN BY RIZ	CHECKED BY JKR	
DATE STARTED 24.01.2013	DATE COMPLETED _____	
OPRG. DEPT. CTPD	ENG. DEPT. AUT-PSAC	

REV. NO.	DATE	DESCRIPTION
00	13 04	FOR APPROVAL

87T-2 BINARY INPUTS

132/13.8kV GT-1 RELAY PANEL-2 +R05.2

S/S 8709-132/13.8KV IN AL-KHARJ CITY

RIYADH SAUDI ARABIA

الشركة الوطنية لنقل الكهرباء

نقل الكهرباء National Grid SA

INDEX	PLANT NO.	DRAWING NUMBER	SHEET NO. SHT	SHEET NO. CONT.	REV. NO.
-	C421	CD-322928	430	432	00

NG/D2-D (2012/01)

DMS VECTOR NGD200

THIS DRAWING AND THE INFORMATION CONTAINED HEREIN ARE THE SOLE PROPERTY OF National Grid SA NO REPRODUCTION IN FULL OR IN PART SHALL BE OBTAINED FROM THIS DOCUMENT WITHOUT THE WRITTEN CONSENT OF ITS OWNER.

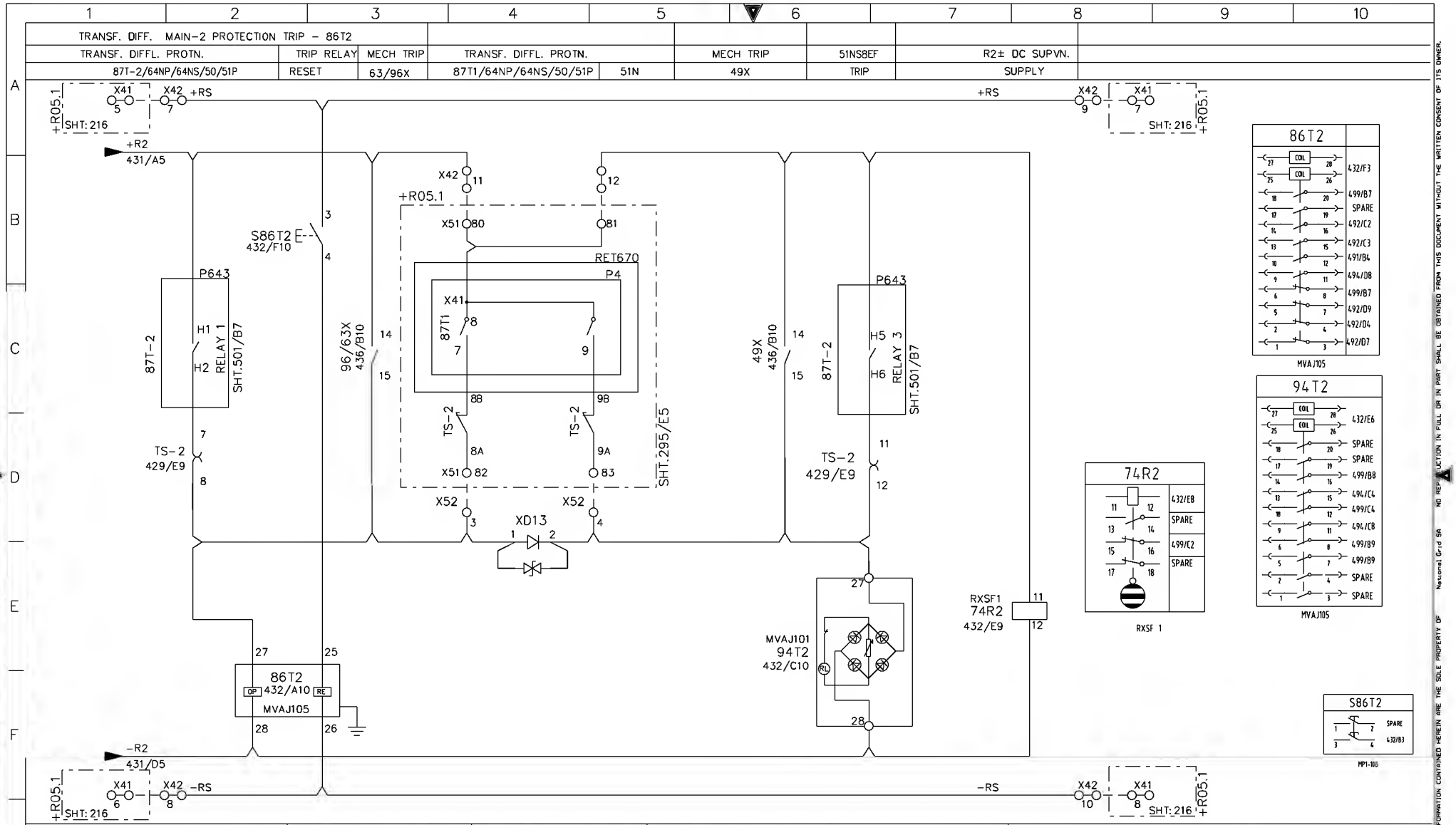

AS-BUILT BY _____ DATE _____	CONTRACT NO. 11131113/00	JOB ORDER NO. S-13656
DRAWN BY RIZ	CHECKED BY JKR	
DATE STARTED 24.01.2013	DATE COMPLETED	
ORG. DEPT. CTPD	ENG. DEPT. AUT-PSAC	

REV. NO.	DATE	DESCRIPTION
00	13 04	FOR APPROVAL

MAIN-2 TRANSF DIFFL PROT TRIP RELAY CIRCUIT

132/13.8kV GT-1 RELAY PANEL-2 +R05.2

S/S 8709-132/13.8KV IN AL-KHARJ CITY

RIYADH SAUDI ARABIA

الشركة الوطنية لنقل الكهرباء

نقل الكهرباء National Grid SA

INDEX	PLANT NO.	DRAWING NUMBER	SHEET NO. SHT	SHEET NO. CONT.	REV. NO.
-	C421	CD-322928	432	433	00

NG/D2-D (2012/01)

DMS VECTOR NGD200

THIS DRAWING AND THE INFORMATION CONTAINED HEREIN ARE THE SOLE PROPERTY OF National Grid SA NO REPRODUCTION IN FULL OR IN PART SHALL BE OBTAINED FROM THIS DOCUMENT WITHOUT THE WRITTEN CONSENT OF ITS OWNER.

1	2	3	4	5	6	7	8	9	10
	TR COOLER	MAIN TANK	MAIN TANK	OLTC OIL	OLTC	MAIN TANK			
	FAIL	OIL LEVEL	OIL LEVEL	LEVEL LOW	OIL LEVEL	PRESS RELIEF			
	ALARM	LOW ALARM	HIGH ALARM	ALARM	HIGH ALARM	TRIP			

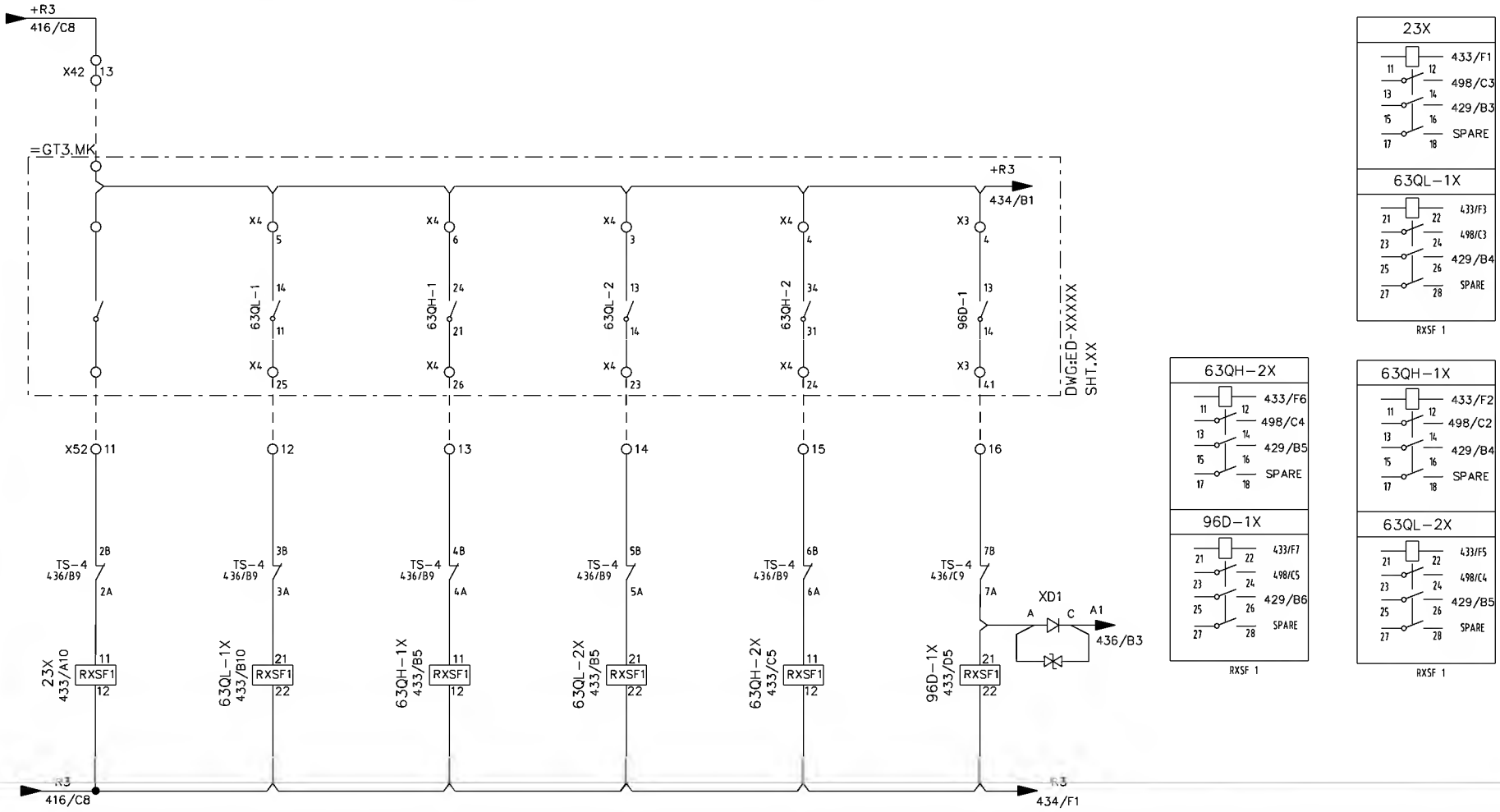

+R05.2

AS-BUILT BY _____ DATE _____	CONTRACT NO. 11131113/00	JOB ORDER NO. S-13656	TRANS .MECH.PROTN.CONTACT MULTI.CKT	الشركة الوطنية لنقل الكهرباء — نقل الكهرباء National Grid SA
	DRAWN BY RIZ	CHECKED BY JKR	132/13.8kV GT-1 RELAY PANEL-2 +R05.2	
00 / 13 04 / FOR APPROVAL	DATE STARTED 24.01.2013	DATE COMPLETED	S/S 8709-132/13.8KV IN AL-KHARJ CITY	INDEX - / PLANT NO. C421 / DRAWING NUMBER CD-322928 / SHEET NO. SHT 433 CONT. 434 / REV. NO. 00
REV. NO. / DATE / DESCRIPTION	OPRG. DEPT. CTPD	ENG. DEPT. AUT-PSAC	RIYADH SAUDI ARABIA	

NG/D2-D (2012/01)

DMS | VECTOR | NGD200

THIS DRAWING AND THE INFORMATION CONTAINED HEREIN ARE THE SOLE PROPERTY OF National Grid SA NO REPRODUCTION IN FULL OR IN PART SHALL BE OBTAINED FROM THIS DOCUMENT WITHOUT THE WRITTEN CONSENT OF ITS OWNER.

	OLTC	BUCHHDLZ	DLTC	GAS	MAIN TR	MAIN TR
	PRESS RELIEF	STG-1	PROTECTIVE	DETECT	OIL TEMP	OIL TEMP
	TRIP	ALARM	TRIP	RELAY ALARM	STG-1 ALARM	HIGH STG-2 TRIP

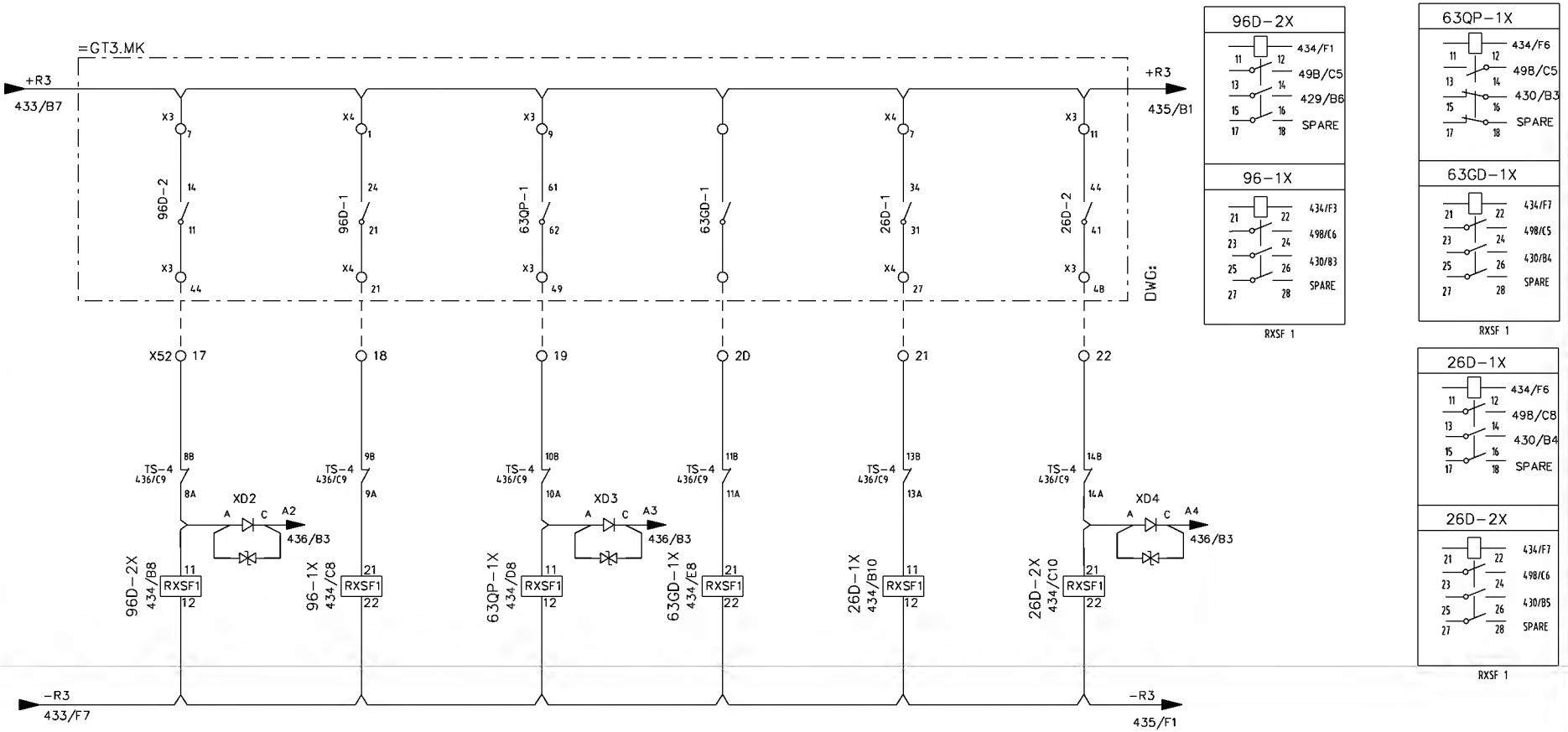

+R05.2

AS-BUILT BY _____ DATE _____

REV. NO.	DATE	DESCRIPTION
00	13 04	FOR APPROVAL

CONTRACT NO. 11131113/00 | JOB ORDER NO. S-13656

DRAWN BY RIZ CHECKED BY JKR

DATE STARTED 24.01.2013 DATE COMPLETED _____

DPRG. DEPT. CTPD ENG. DEPT. AUT-PSAC

TRANS .MECH.PROTN.CONTACT MULTI.CKT

132/13.8kV GT-1 RELAY PANEL-2 +R05.2

S/S 8709-132/13.8KV IN AL-KHARJ CITY

RIYADH SAUDI ARABIA

الشركة الوطنية لنقل الكهرباء

نقل الكهرباء National Grid SA

INDEX	PLANT NO.	DRAWING NUMBER	SHEET NO. SHT	SHEET NO. CONT.	REV. NO.
-	C421	CD-322928	434	435	00

NG/D2-D (2012/01)

DMS VECTOR NGD200

THIS DRAWING AND THE INFORMATION CONTAINED HEREIN ARE THE SOLE PROPERTY OF National Grid SA NO REPRODUCTION IN FULL OR IN PART SHALL BE OBTAINED FROM THIS DOCUMENT WITHOUT THE WRITTEN CONSENT OF ITS OWNER.

	WDG TEMP HIGH STG-1 ALARM (HV)	WDG TEMP HIGH STG-2 TRIP (HV)	SUDDEN PRESSURE TRIP	BUCHZ STAGE-2 TRIP	OLTC PROTECTIVE RELAY TRIP	WDG TEMP HIGH STG-1 ALARM (LV)

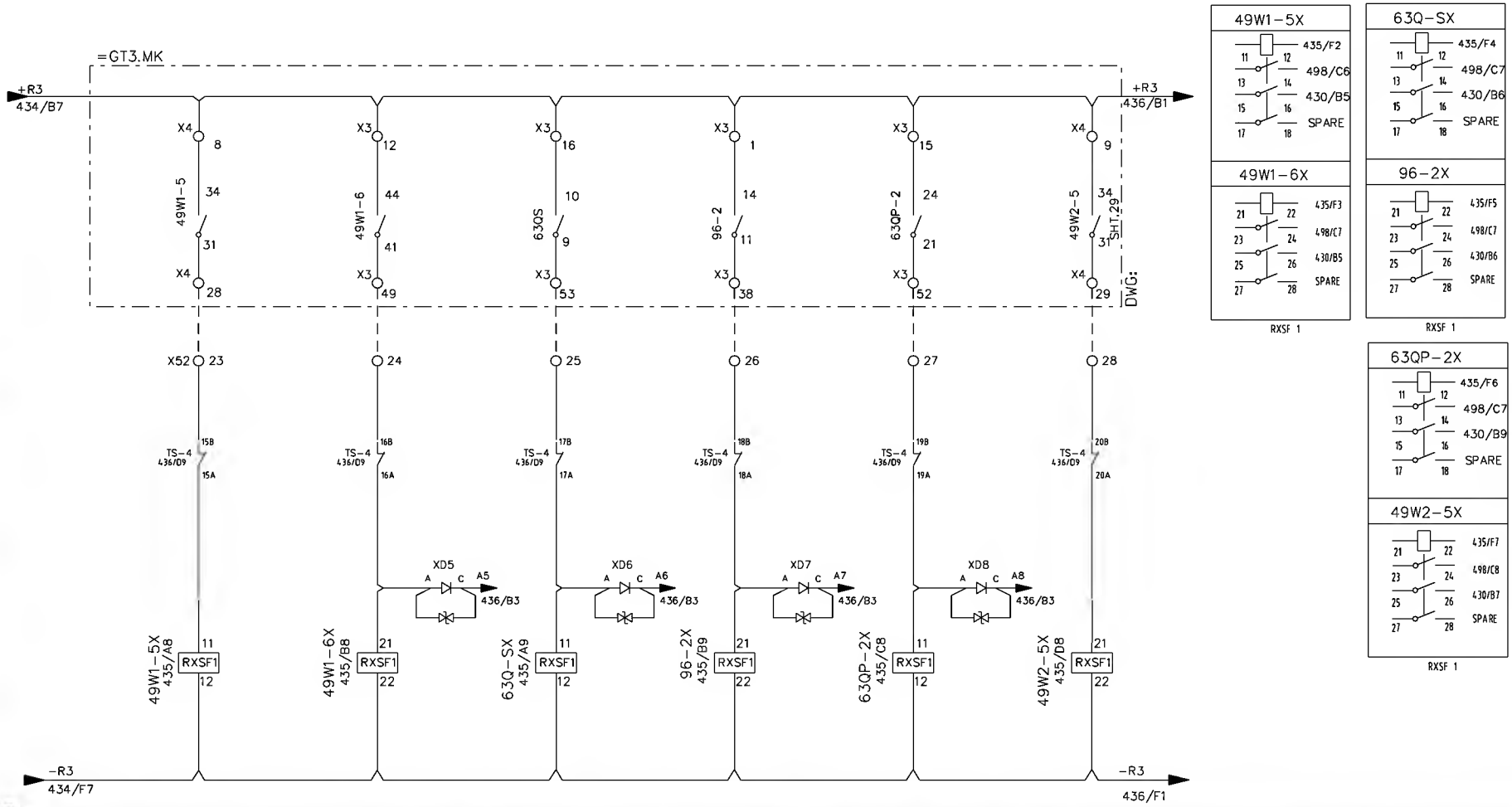

+R05.2

AS-BUILT BY _____ DATE _____	CONTRACT NO. 11131113/00	JOB ORDER NO. S-13656	TRANS.MECH.PROTN.CONTACT.MULTI.CKT	الشركة الوطنية لنقل الكهرباء — نقل الكهرباء National Grid SA
	DRAWN BY RIZ	CHECKED BY JKR	132/13.8kV GT-1 RELAY PANEL-2 +R05.2	
00 / 13 04 / FOR APPROVAL	DATE STARTED 24.01.2013	DATE COMPLETED	S/S 8709-132/13.8KV IN AL-KHARJ CITY	INDEX - / PLANT NO. C421 / DRAWING NUMBER CD-322928 / SHEET NO. SHT 435 CONT. 436 / REV. NO. 00
REV. NO. / DATE / DESCRIPTION	ORG. DEPT. CTPD	ENG. DEPT. AUT-PSAC	RIYADH SAUDI ARABIA	

NG/D2-D (2012/01)

DMS | VECTOR | NGD200

THIS DRAWING AND THE INFORMATION CONTAINED HEREIN ARE THE SOLE PROPERTY OF National Grid SA NO REPRODUCTION IN FULL OR IN PART SHALL BE OBTAINED FROM THIS DOCUMENT WITHOUT THE WRITTEN CONSENT OF ITS OWNER.

WINDING-2	FIRE	BUCHLTZ		MECHANICAL	
TEMP HIGH	PROTN.	CONSERVATOR		PROTECTION	+R3
STAGE-2 TRIP (LV)	FAULTY	ALARM	TRIP	TRIPPING	DC SUPERVISION

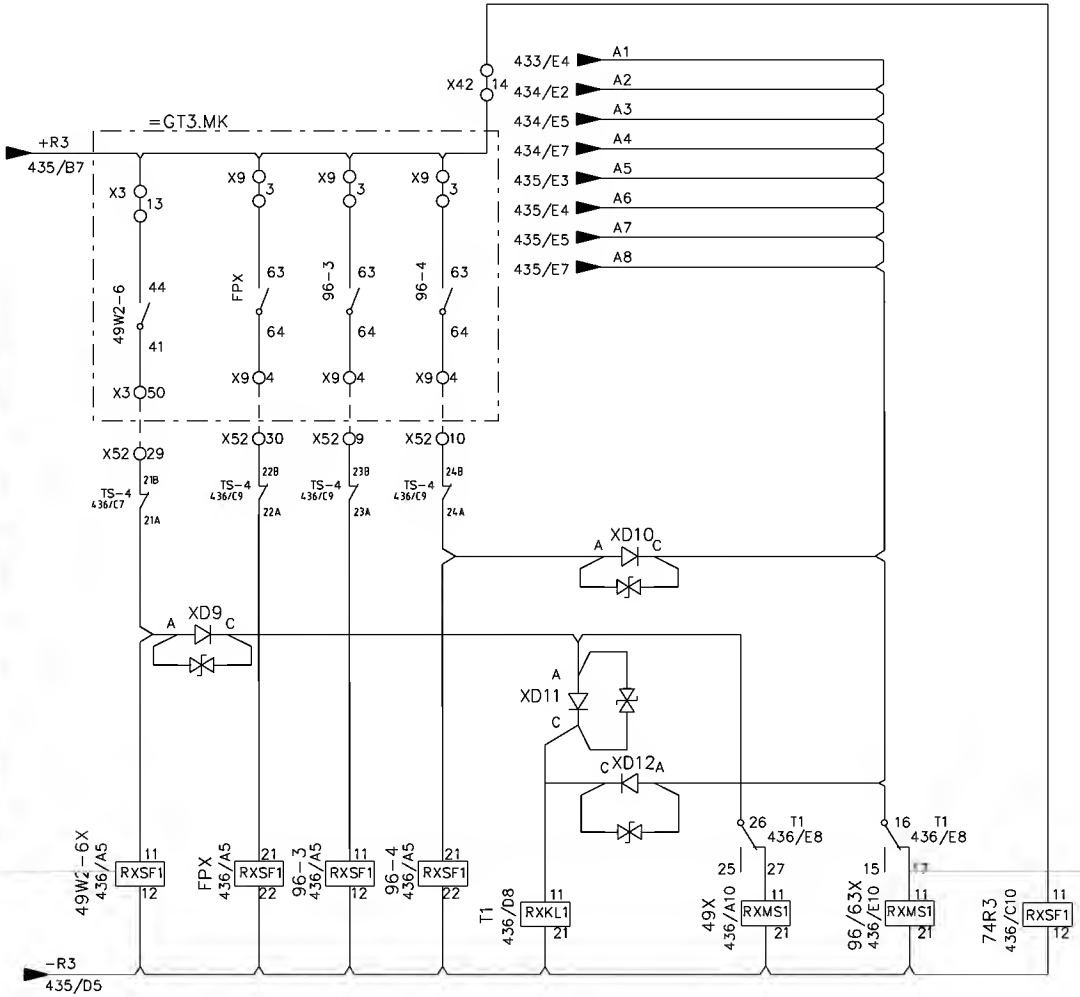

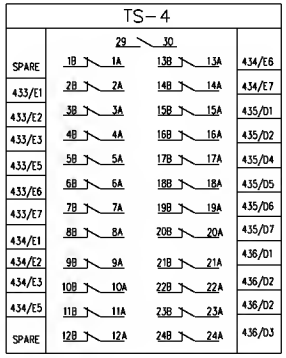

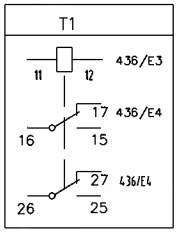

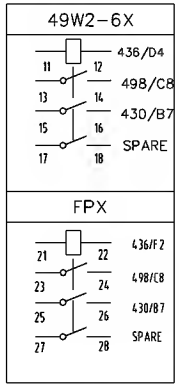

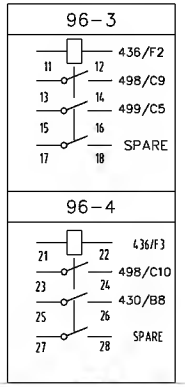

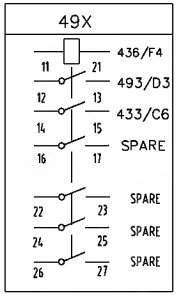

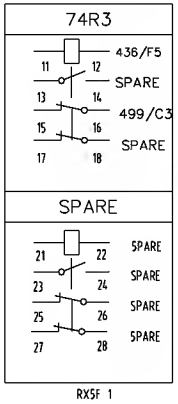

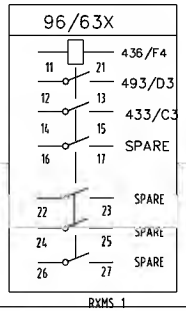

AS-BUILT BY _____ DATE _____	CONTRACT NO. 11131113/00	JOB ORDER NO. S-13656

REV. NO.	DATE	DESCRIPTION
00	13 04	FOR APPROVAL

DRAWN BY RIZ CHECKED BY JKR
DATE STARTED 24.01.2013 DATE COMPLETED _____
OPRG. DEPT. CTPD ENG. DEPT. AUT-PSAC

TRANS MECH.PROTN.CONTACT.MULTI.CKT
132/13.8kV GT-1 RELAY PANEL-2 +R05.2
S/S 8709-132/13.8KV IN AL-KHARJ CITY
RIYADH SAUDI ARABIA

الشركة الوطنية لنقل الكهرباء
نقل الكهرباء
National Grid SA

INDEX	PLANT NO.	DRAWING NUMBER	SHEET NO. SHT	SHEET NO. CONT.	REV. NO.
-	C421	CD-322928	436	491	00

NG/D2-D (2012/01)
DMS VECTOR NGD200

THIS DRAWING AND THE INFORMATION CONTAINED HEREIN ARE THE SOLE PROPERTY OF National Grid SA NO REPRODUCTION IN FULL OR IN PART SHALL BE OBTAINED FROM THIS DOCUMENT WITHOUT THE WRITTEN CONSENT OF ITS OWNER.

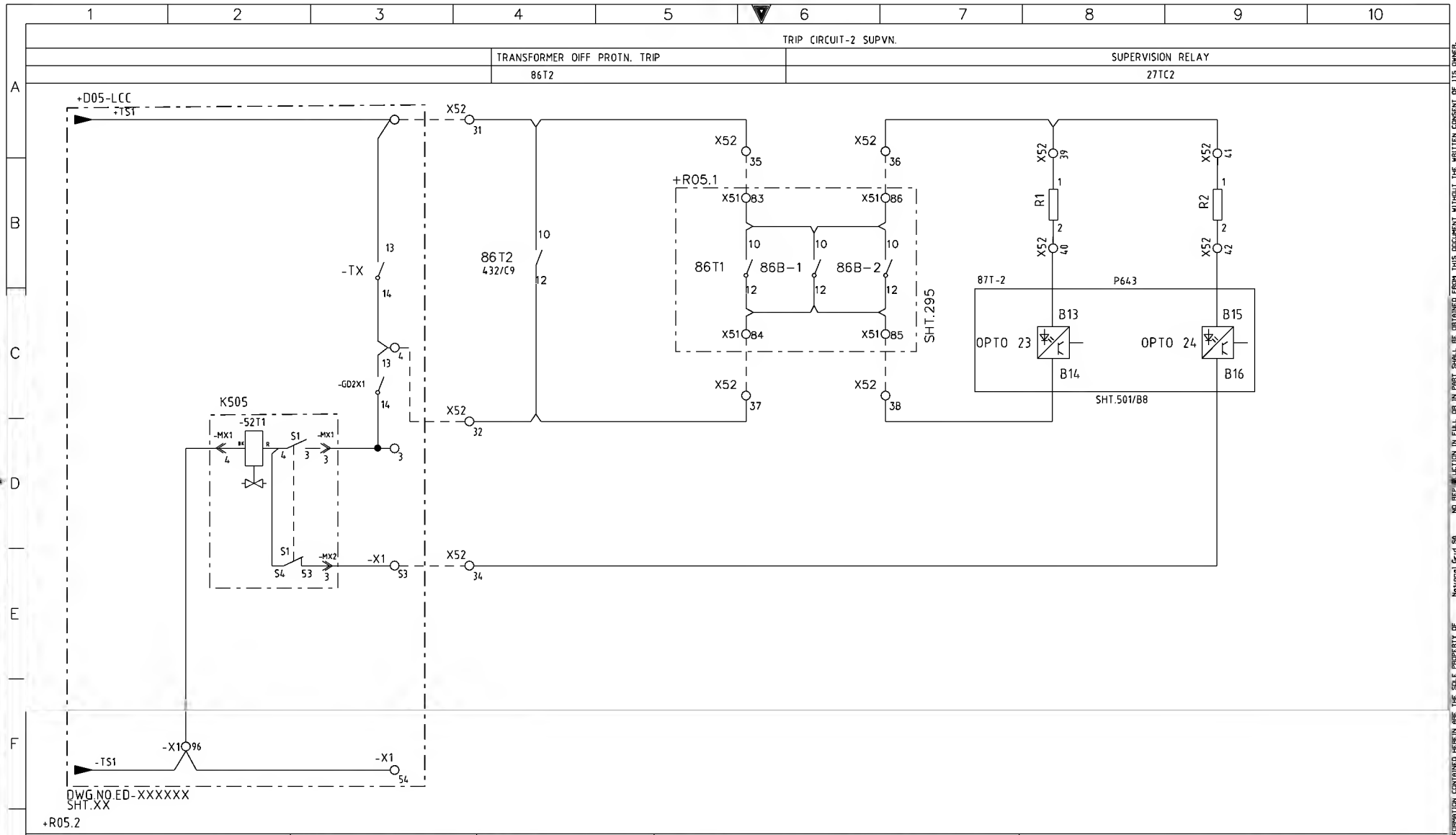

AS-BUILT BY _____ DATE _____	CONTRACT NO. 11131113/00	JOB ORDER NO. S-13656

REV. NO.	DATE	DESCRIPTION
00	13 04	FOR APPROVAL

DRAWN BY RIZ CHECKED BY JKR
DATE STARTED 24.01.2013 DATE COMPLETED _____
ORGG. DEPT. CTPD ENG. DEPT. AUT-PSAC

CB K305 TRIP CIRCUIT-2 SUPERVISION CIRCUIT
132/13.8kV GT-1 RELAY PANEL-2 +R05.2
S/S 8709-132/13.8KV IN AL-KHARJ CITY
RIYADH SAUDI ARABIA

الشركة الوطنية لنقل الكهرباء
نقل الكهرباء
National Grid SA

INDEX	PLANT NO.	DRAWING NUMBER	SHEET NO. SHT	SHEET NO. CONT.	REV. NO.
-	C421	CD-322928	491	492	00

NG/D2-0 (2012/01)
DMS VECTOR NGD200

THIS DRAWING AND THE INFORMATION CONTAINED HEREIN ARE THE SOLE PROPERTY OF National Grid SA NO REPRODUCTION IN FULL OR IN PART SHALL BE OBTAINED FROM THIS DOCUMENT WITHOUT THE WRITTEN CONSENT OF ITS OWNER.

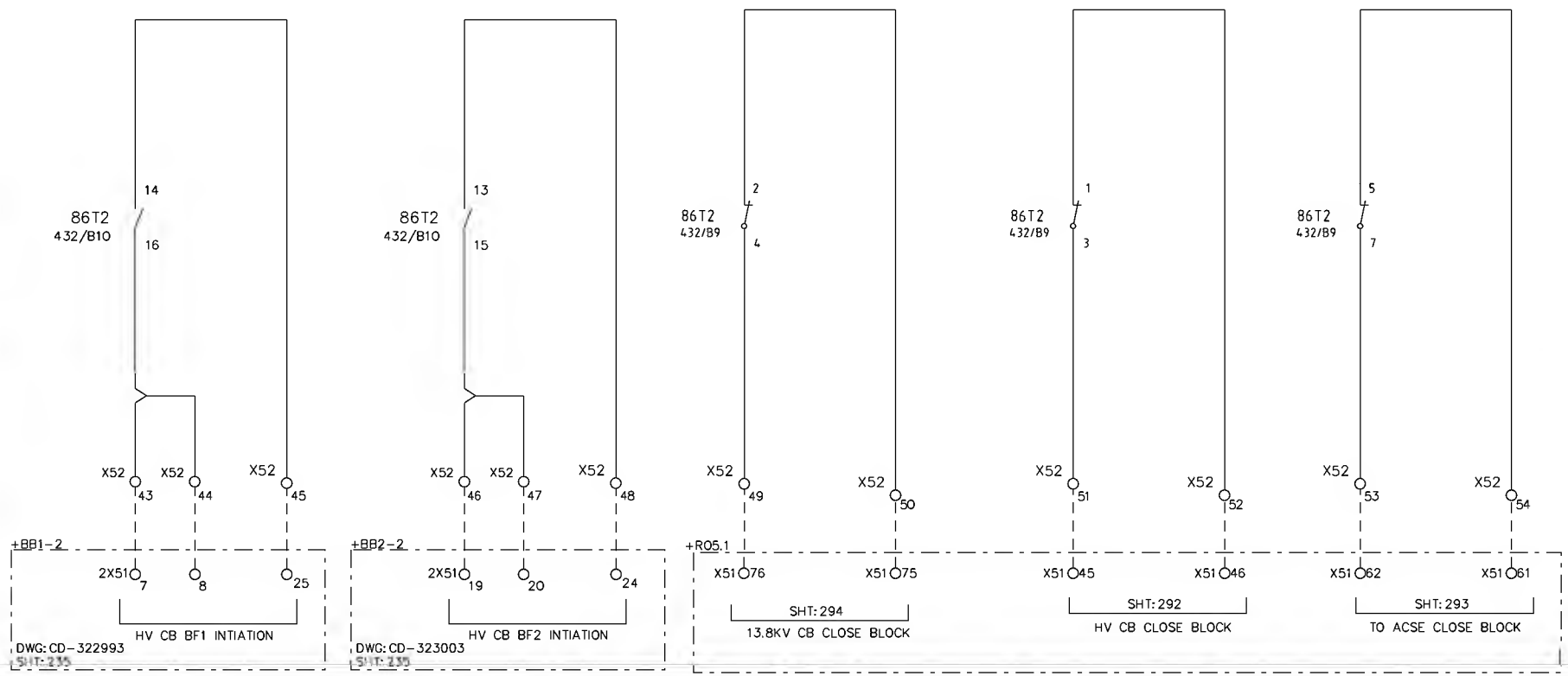

AS-BUILT BY _____ DATE _____	CONTRACT NO. 11131113/00	JOB ORDER NO. S-13656
REV. NO.	DATE	DESCRIPTION
00	13 04	FOR APPROVAL

DRAWN BY RIZ CHECKED BY JKR
DATE STARTED 24.01.2013 DATE COMPLETED _____
ORG. DEPT. CTPD ENG. DEPT. AUT-PSAC

BF INI & CLOSE BLOCK CIRCUIT

132/13.8kV GT-1 RELAY PANEL-2 +R05.2

S/S 8709-132/13.8KV IN AL-KHARJ CITY

RIYADH SAUDI ARABIA

الشركة الوطنية لنقل الكهرباء

نقل الكهرباء
National Grid SA

INDEX	PLANT NO.	DRAWING NUMBER	SHEET NO. SHT	SHEET NO. CONT.	REV. NO.
-	C421	CD-322928	492	493	00

NG/D2-D (2012/01)

DMS VECTOR NGD200

THIS DRAWING AND THE INFORMATION CONTAINED HEREIN ARE THE SOLE PROPERTY OF National Grid SA NO REPRODUCTION IN FULL OR IN PART SHALL BE OBTAINED FROM THIS DOCUMENT WITHOUT THE WRITTEN CONSENT OF ITS OWNER.

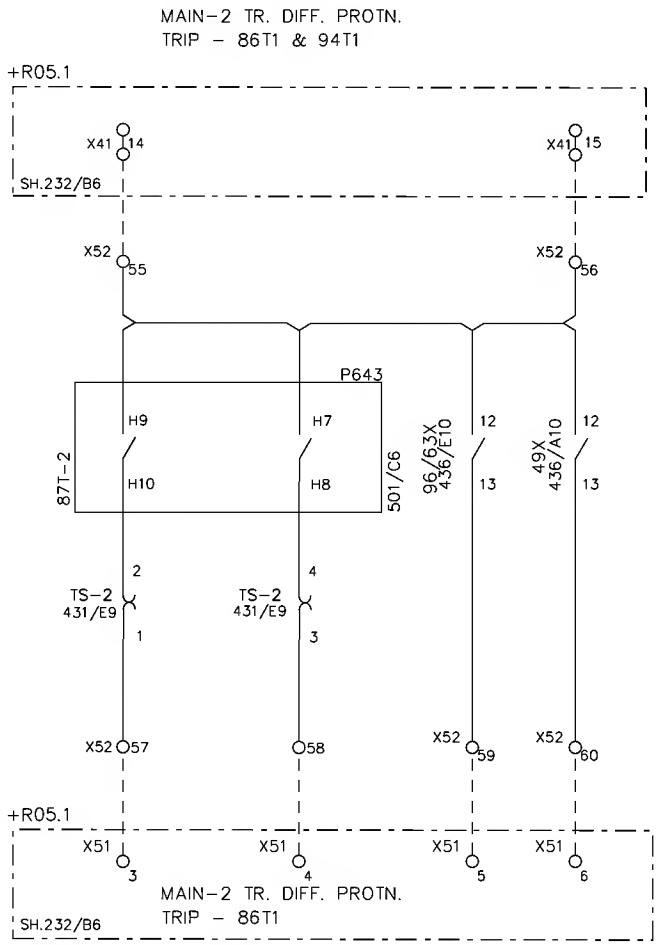

+R05.2

AS-BUILT BY _____ DATE _____	CONTRACT NO. 11131113/00	JOB ORDER NO. S-13656
00 / 13 04 / FOR APPROVAL (REV. NO. / DATE / DESCRIPTION)	DRAWN BY RIZ CHECKED BY JKR	
	DATE STARTED 24.01.2013 DATE COMPLETED _____	
	ORG. DEPT. CTPD ENG. DEPT. AUT-PSAC	

TRANSFORMER MECHANICAL PROTN.

132/13.8kV GT-1 RELAY PANEL-2 +R05.2

S/S 8709-132/13.8KV IN AL-KHARJ CITY

RIYADH SAUDI ARABIA

الشركة الوطنية لنقل الكهرباء

نقل الكهرباء National Grid SA

INDEX	PLANT NO.	DRAWING NUMBER	SHEET NO. SHT	SHEET NO. CONT.	REV. NO.
-	C421	CD-322928	493	494	00

NG/D2-0 (2012/01)

DMS VECTOR NGD200

THIS DRAWING AND THE INFORMATION CONTAINED HEREIN ARE THE SOLE PROPERTY OF National Grid SA NO REPRODUCTION IN FULL OR IN PART SHALL BE OBTAINED FROM THIS DOCUMENT WITHOUT THE WRITTEN CONSENT OF ITS OWNER.

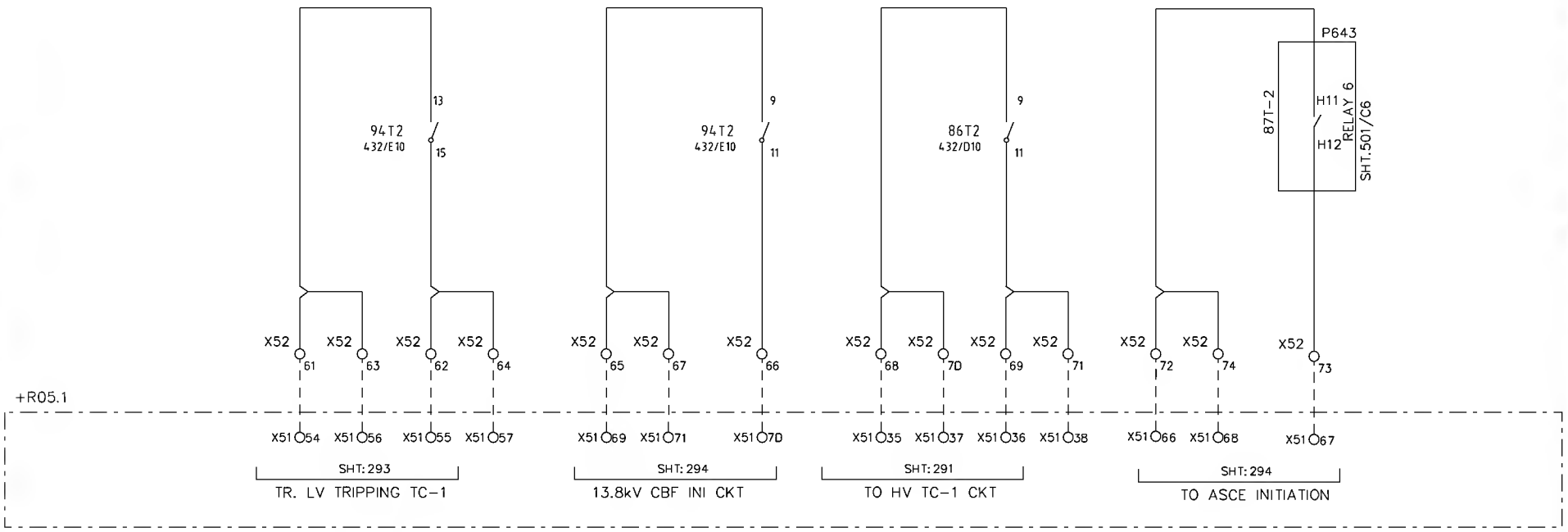

AS-BUILT BY _____ DATE _____	CONTRACT NO. 11131113/00	JOB ORDER NO. S-13656

REV. NO.	DATE	DESCRIPTION
00	13 04	FOR APPROVAL

DRAWN BY RIZ CHECKED BY JKR
DATE STARTED 24.01.2013 DATE COMPLETED _____
ORG. DEPT. CTPD ENG. DEPT. AUT-PSAC

CONTACTS FOR TRIP AND CLOSE BLOCK

132/13.8kV GT-1 RELAY PANEL-2 +R05.2

S/S 8709-132/13.8KV IN AL-KHARJ CITY

RIYADH SAUDI ARABIA

الشركة الوطنية لنقل الكهرباء

نقل الكهرباء
National Grid SA

INDEX	PLANT NO.	DRAWING NUMBER	SHEET NO. SHT	SHEET NO. CONT.	REV. NO.
-	C421	CD-322928	494	496	00

NG/D2-D (2012/01)

DMS VECTOR NGD200

THIS DRAWING AND THE INFORMATION CONTAINED HEREIN ARE THE SOLE PROPERTY OF National Grid SA NO REPRODUCTION IN FULL OR IN PART SHALL BE OBTAINED FROM THIS DOCUMENT WITHOUT THE WRITTEN CONSENT OF ITS OWNER.

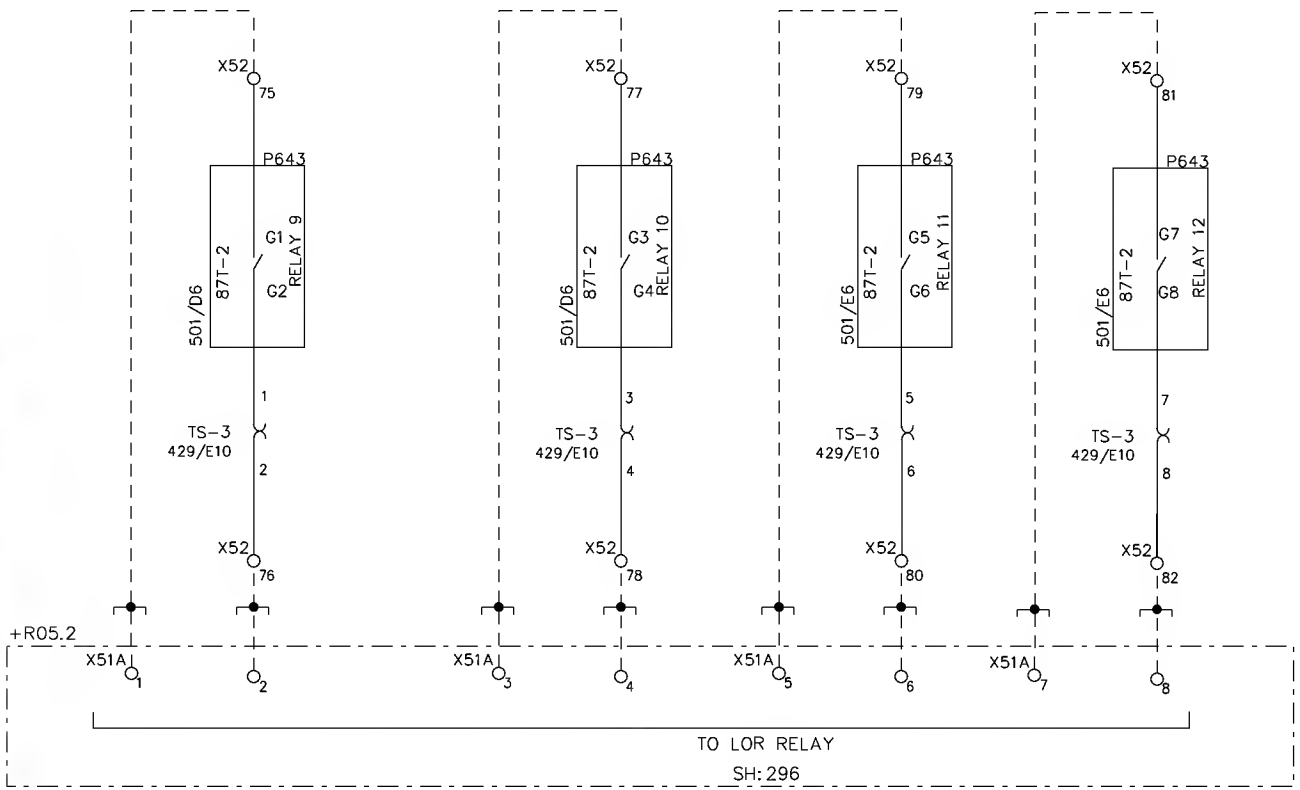

AS-BUILT BY _____ DATE _____	CONTRACT NO. 11131113/00	JOB ORDER NO. S-13656
DRAWN BY RIZ	CHECKED BY JKR	
DATE STARTED 24.01.2013	DATE COMPLETED	
DRWG. DEPT. CTPD	ENG. DEPT. AUT-PSAC	

REV. NO.	DATE	DESCRIPTION
00	13 04	FOR APPROVAL

CONTACTS FOR U/F LOAD SHEDDING

132/13.8kV GT-1 RELAY PANEL-2 +R05.2

S/S 8709-132/13.8KV IN AL-KHARJ CITY

RIYADH SAUDI ARABIA

الشركة الوطنية لنقل الكهرباء

نقل الكهرباء
National Grid SA

INDEX	PLANT NO.	DRAWING NUMBER	SHEET NO. SHT	SHEET NO. CONT.	REV. NO.
-	C421	CD-322928	496	498	00

NG/D2-0 (2012/01)

DMS | VECTOR | NGD200

THIS DRAWING AND THE INFORMATION CONTAINED HEREIN ARE THE SOLE PROPERTY OF National Grid SA NO REPRODUCTION IN FULL OR IN PART SHALL BE OBTAINED FROM THIS DOCUMENT WITHOUT THE WRITTEN CONSENT OF ITS OWNER.

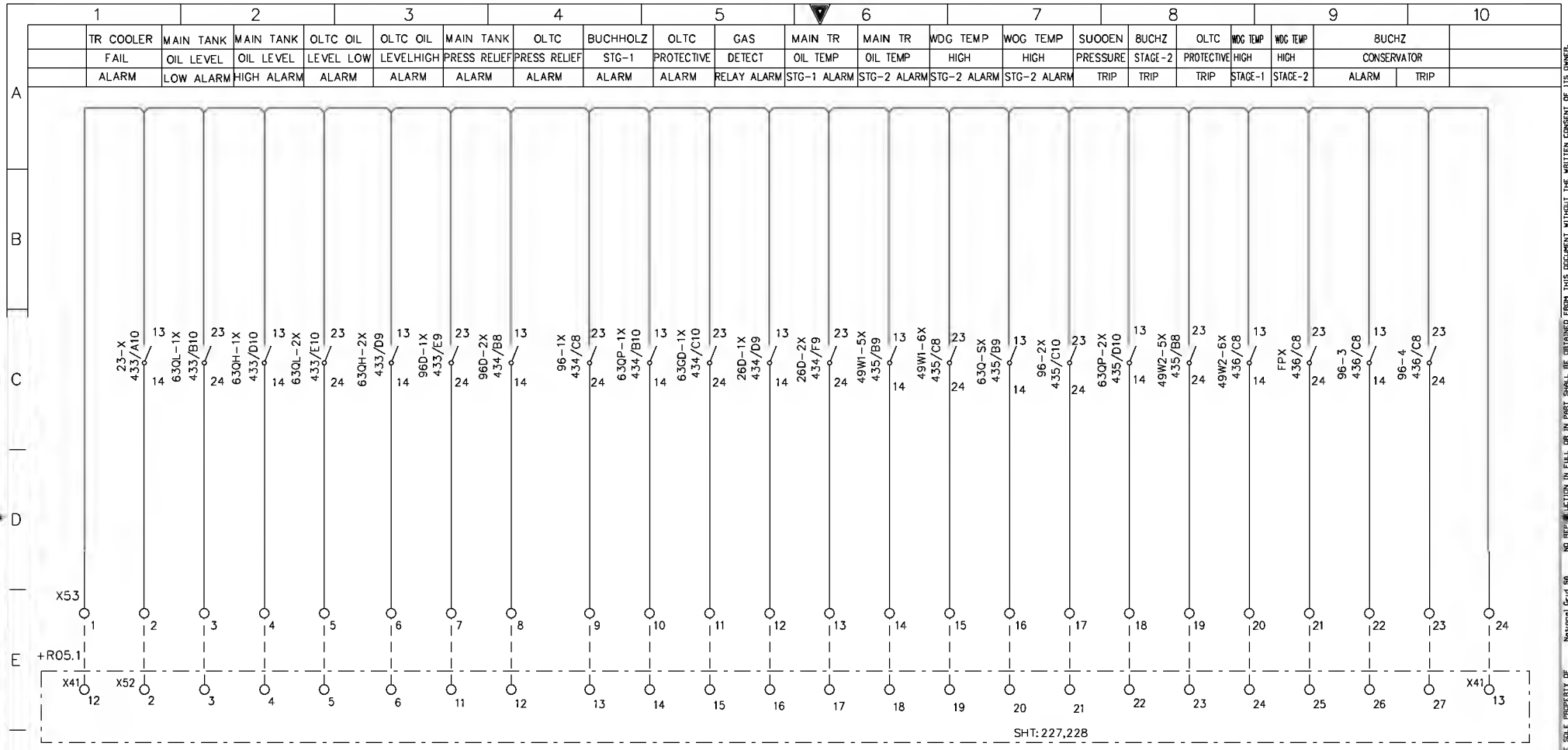

AS-BUILT BY _____ DATE _____	CONTRACT NO. 11131113/00	JOB ORDER NO. S-13656

REV. NO.	DATE	DESCRIPTION
00	13 04	FOR APPROVAL

DRAWN BY RIZ CHECKED BY JKR
DATE STARTED 24.01.2013 DATE COMPLETED _____
ORG. DEPT. CTPD ENG. DEPT. AUT-PSAC

MECH PROTN. ALARM CIRCUIT FOR SET-1
132/13.8kV GT-1 RELAY PANEL-2 +R05.2
S/S 8709-132/13.8KV IN AL-KHARJ CITY
RIYADH SAUDI ARABIA

الشركة الوطنية لنقل الكهرباء
نقل الكهرباء
National Grid SA

INDEX	PLANT NO.	DRAWING NUMBER	SHEET NO. SHT	SHEET NO. CONT.	REV. NO.
-	C421	CD-322928	498	499	00

NG/02-0 (2012/01)
DMS VECTOR NG0200

THIS DRAWING AND THE INFORMATION CONTAINED HEREIN ARE THE SOLE PROPERTY OF National Grid SA NO REPRODUCTION IN FULL OR IN PART SHALL BE OBTAINED FROM THIS DOCUMENT WITHOUT THE WRITTEN CONSENT OF ITS OWNER.

87T-2	R2 DC SUPPLY	R3 DC SUPPLY	TC-2	86T2	94T2	BUCHZ CONSERVATOR	SPARE
FAULTY	FAIL	FAIL	FAIL	OPTD	OPTD	ALARM	

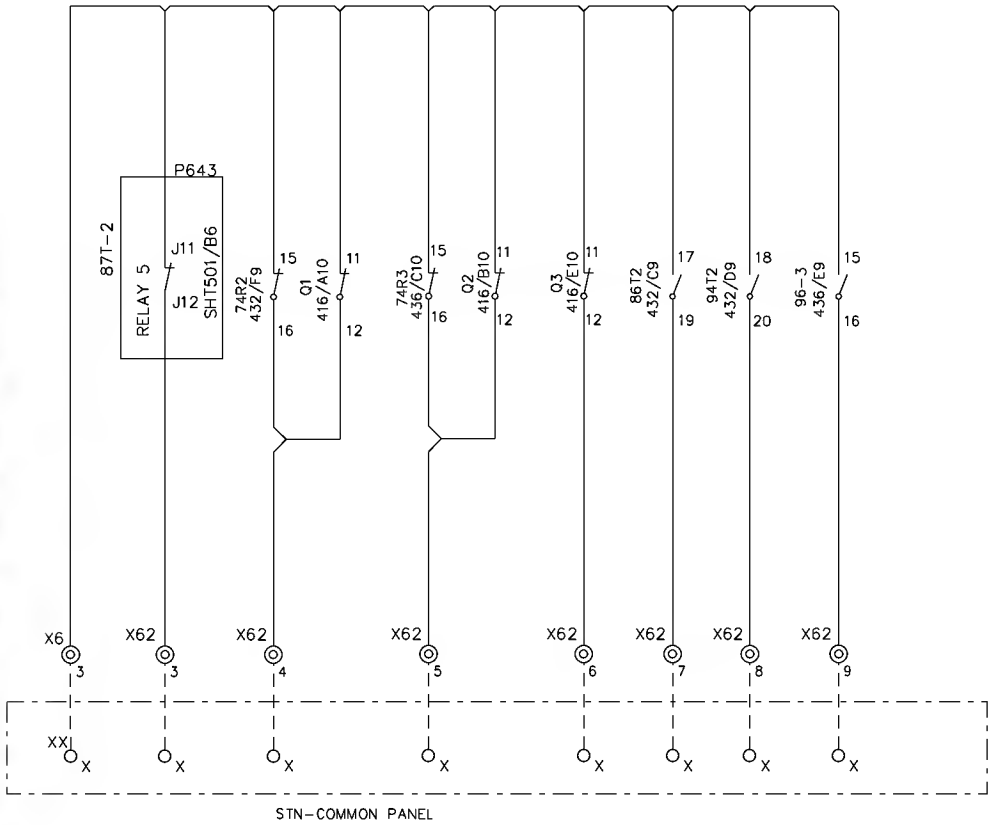

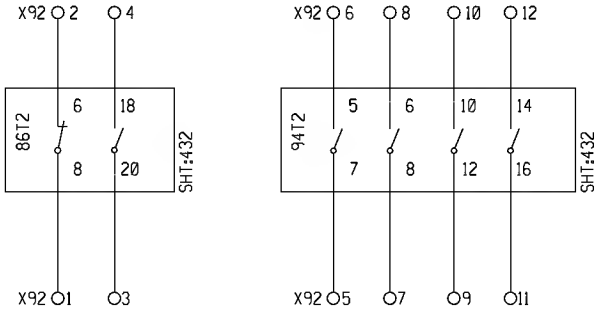

AS-BUILT BY _____ DATE _____	CONTRACT NO. 11131113/00	JOB ORDER NO. S-13656
00 / 13 04 / FOR APPROVAL (REV. NO. / DATE / DESCRIPTION)	DRAWN BY RIZ CHECKED BY JKR; DATE STARTED 24.01.2013 DATE COMPLETED _____; ORGG. DEPT. CTPD ENG. DEPT. AUT-PSAC	

STN COMMON ALARM CIRCUIT

132/13.8kV GT-1 RELAY PANEL-2 +R05.2

S/S 8709-132/13.8KV IN AL-KHARJ CITY

RIYADH SAUDI ARABIA

الشركة الوطنية لنقل الكهرباء

نقل الكهرباء National Grid SA

INDEX	PLANT NO.	DRAWING NUMBER	SHEET NO. SHT	SHEET NO. CONT.	REV. NO.
-	C421	CD-322928	499	501	00

NG/D2-0 (2012/01)

DMS VECTOR NGD200

THIS DRAWING AND THE INFORMATION CONTAINED HEREIN ARE THE SOLE PROPERTY OF National Grid SA NO REPRODUCTION IN FULL OR IN PART SHALL BE OBTAINED FROM THIS DOCUMENT WITHOUT THE WRITTEN CONSENT OF HS-OWNER.

87T-2

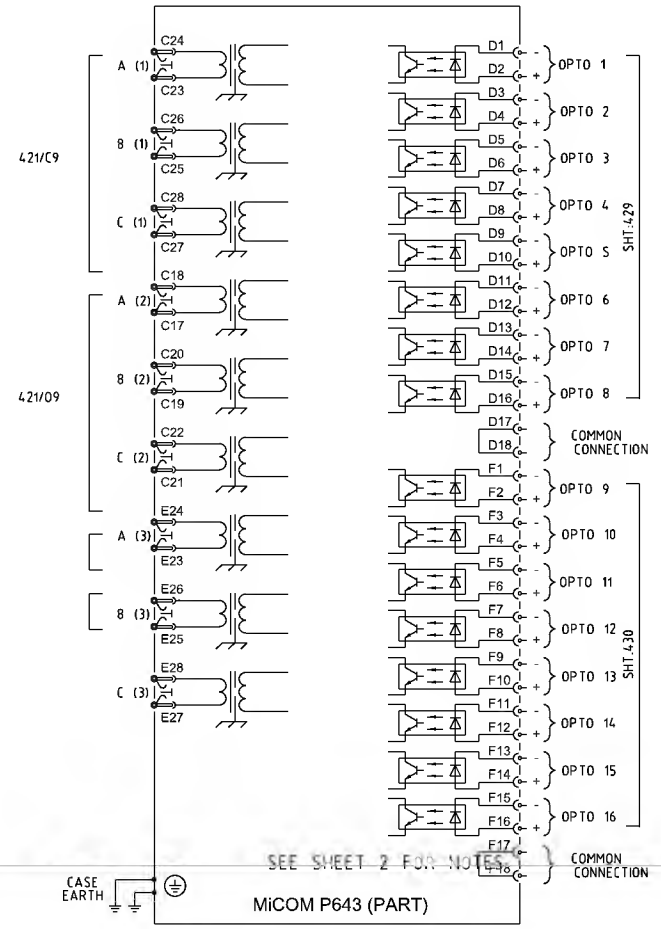

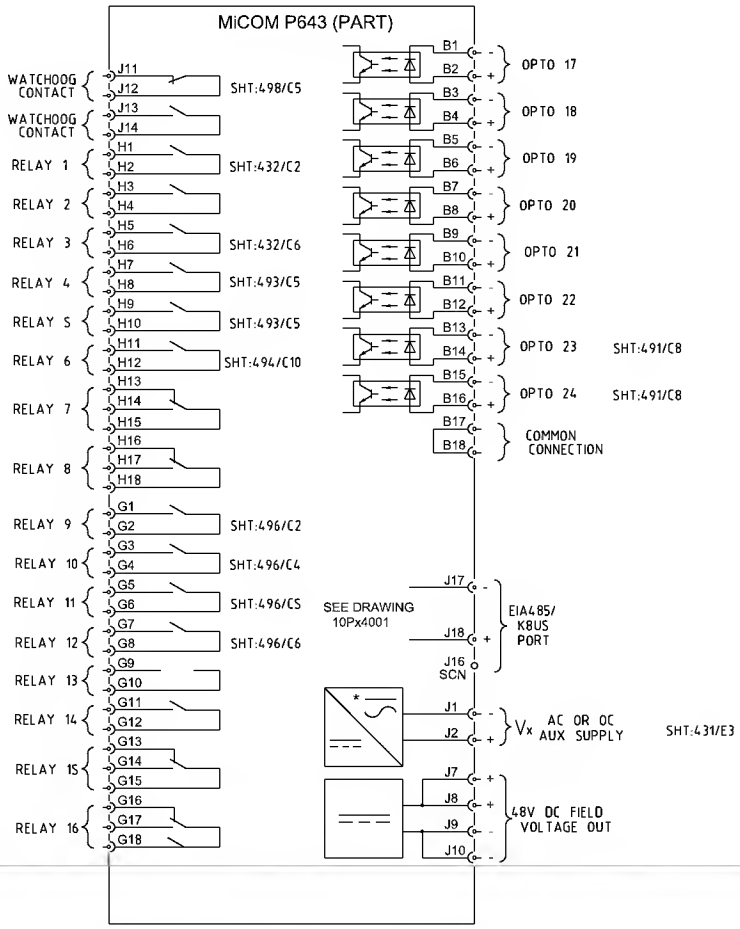

AS-BUILT BY _____ DATE _____	CONTRACT NO. 11131113/00	JOB ORDER NO. S-13656	BLOCK REFERENCE		
			132/13.8kV GT-1 RELAY PANEL-2 +R05.2		
00 / 13 04 / FOR APPROVAL	DRAWN BY RIZ CHECKED BY JKR		S/S 8709-132/13.8KV IN AL-KHARJ CITY		
REV. NO. / DATE / DESCRIPTION	DATE STARTED 24.01.2013 DATE COMPLETED _____		RIYADH SAUDI ARABIA		
	ORGG. DEPT. CTPD ENG. DEPT. AUT-PSAC				

الشركة الوطنية لنقل الكهرباء
نقل الكهرباء
National Grid SA

INDEX	PLANT NO.	DRAWING NUMBER	SHEET NO. SHT	SHEET NO. CONT.	REV. NO.
-	C421	CD-322928	501	502	00

NG/D2-D (2012/01)

DMS | VECTOR | NGD200

THIS DRAWING AND THE INFORMATION CONTAINED HEREIN ARE THE SOLE PROPERTY OF National Grid SA NO REPRODUCTION IN FULL OR IN PART SHALL BE OBTAINED FROM THIS DOCUMENT WITHOUT THE WRITTEN CONSENT OF ITS OWNER.

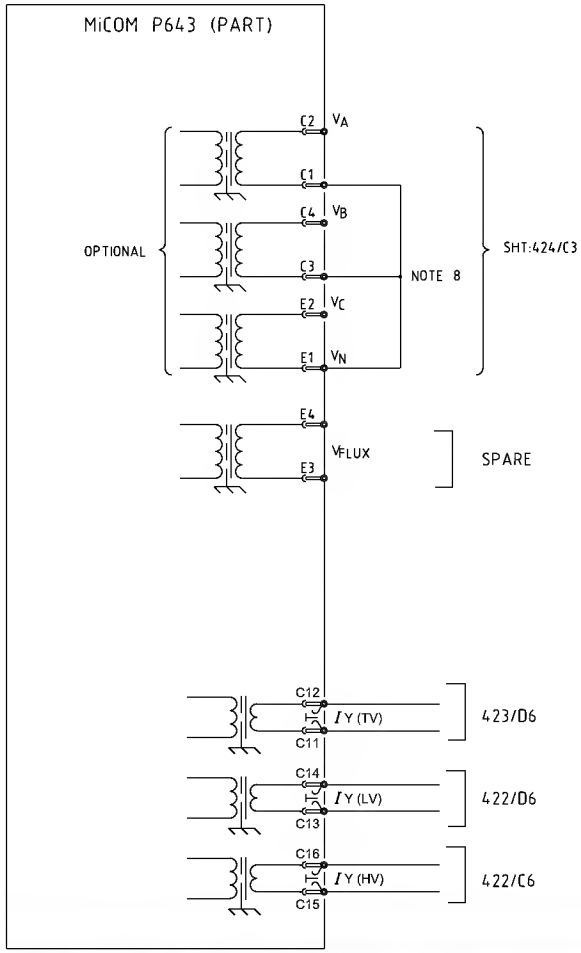

P643 BIAS INPUTS	BIAS 1	BIAS 2	BIAS 3
HV + LV	HV		LV
HV + LV (x2)	HV	LV	LV
HV (x2) + LV	HV	HV	LV
HV + TV + LV	HV	TV	LV

TABLE 1 (NOTES 5 & 6)

NOTE

1. (a) C.T. SHORTING LINKS MAKE BEFORE (b) DISCONNECT.
   (b) TERMINAL.
   (c) PIN TERMINAL (P.C.B. TYPE)
2. SEE TABLE 1 FOR BIAS ASSIGNMENT TO ACTUAL WINDINGS. BIAS INPUT 1 IS ALWAYS AN HV WINDING CONNECTION.
3. WYE GROUND INPUTS APPLICABLE FOR GROUNDED (EARTHED) WINDINGS.
4. THE VT MAY BE CONNECTED ACROSS ANY PHASE-PHASE PAIR. (USED BY V/Hz W2 PROTECTION ONLY).
5. (x2) DENOTES WINDINGS ENERGISED VIA TWO CT SETS. THE RELAY SOFTWARE SUMMATES A VIRTUAL WINDING CURRENT FROM THE TWO BIAS INPUTS.
6. TV INPUTS ARE NOT MANDATORY IF THE TERTIARY HAS NO LOAD.
7. FOR COMMS OPTIONS SEE DRAWING 10Px4001.
8. THE VT STAR POINT MUST BE MADE EXTERNALLY AS SHOWN.
9. THE MONITORED THREE PHASE VOLTAGE MAY BE CONNECTED HV, TV OR LV SIDE. (USED BY V/Hz W1 PROTECTION AND OTHER VOLTAGE PROTECTION).
10. DERIVED NEUTRAL POINT. SEE P64X/EN T/- - FOR DETAILS OF RESISTORS.

REV. NO.	DATE	DESCRIPTION
00	13 04	FOR APPROVAL

AS-BUILT BY _____ DATE _____

CONTRACT NO. 11131113/00 | JOB ORDER NO. S-13656

DRAWN BY RIZ CHECKED BY JKR

DATE STARTED 24.01.2013 DATE COMPLETED _____

DPRG. DEPT. CTPD ENG. DEPT. AUT-PSAC

BLOCK REFERENCE

132/13.8kV GT-1 RELAY PANEL-2 +R05.2

S/S 8709-132/13.8KV IN AL-KHARJ CITY

RIYADH SAUDI ARABIA

الشركة الوطنية لنقل الكهرباء

نقل الكهرباء National Grid SA

INDEX	PLANT NO.	DRAWING NUMBER	SHEET NO. SHT	SHEET NO. CONT.	REV. NO.
-	C421	CD-322928	502	506	00

NG/D2-0 (2012/01)

DMS | VECTOR | NGD200

THIS DRAWING AND THE INFORMATION CONTAINED HEREIN ARE THE SOLE PROPERTY OF National Grid SA NO REPRODUCTION IN FULL OR IN PART SHALL BE OBTAINED FROM THIS DOCUMENT WITHOUT THE WRITTEN CONSENT OF ITS OWNER.

REFERENCE	X3 AC CKT.
411/A3	1
411/A7	2
411/A3	3
411/A7	4
411/B3	5
411/B7	6
411/B3	7
411/B7	8
SPARE	9
SPARE	10

REFERENCE	XTJ T.JACK
411/C3	1
411/D3	2
411/D3	3
411/D3	4
SPARE	5

REFERENCE	XSH SPACE HEATER
411/E6	1
411/F6	2
SPARE	3

REFERENCE	X6 ALM. CKT.
412/B5	1
412/B5	2
499/E1	3

REFERENCE	X2 VT CKT.
424/B4	1
424/B4	2
424/C4	3
424/C4	4
SPARE	5

REFERENCE	X1 CT CKTS.
421/B5	1
421/B5	2
421/B5	3
421/B5	4
421/B5	5
421/B5	6
421/C5	7
421/C5	8
421/C5	9
SPARE	10
421/E5	11
421/E5	12
421/E5	13
421/E5	14
421/E5	15
421/F5	16
421/F5	17
421/F5	18
421/F5	19
SPARE	20
422/D4	21
422/D4	22
422/D4	23
422/D4	24
422/D4	25
422/E4	26
422/E4	27
422/E4	28
422/E4	29
SPARE	30
423/E5	31
423/E5	32
423/D5	33
423/D5	34
423/D5	35
SPARE	36
SPARE	37
SPARE	38
SPARE	39
SPARE	40

REFERENCE	X52 CON & PROTN CKTS.
416/B3	1
416/B3	2
429/D3	3
432/D4	4
432/D5	5
SPARE	6
SPARE	7
SPARE	8
436/D3	9
436/D3	10
433/D1	11
433/D2	12
433/D4	13
433/D5	14
433/D6	15
433/D7	16
434/D1	17
434/D2	18
434/D4	19
434/D5	20
434/D6	21
434/D7	22
435/D1	23
435/D2	24
435/D4	25
435/D5	26
435/D6	27
435/D7	28
436/D2	29
436/D2	30
491/A4	31
491/C4	32
491/D4	33
491/E4	34
491/B5	35
491/A6	36
491/C5	37
491/C6	38
491/AB	39
491/B8	40
491/A9	41
491/B9	42
492/E2	33
492/E2	44
492/E3	45
492/E4	46
492/E4	47
492/E5	48
492/E5	49
492/E6	50

REFERENCE	X52 CON & PROTN CKTS.
492/E7	51
492/EB	52
492/E9	53
492/E10	54
SPARE	55
SPARE	56
493/E5	57
493/E5	58
493/E7	59
493/E7	60
494/E3	61
494/E4	62
494/E4	63
494/E5	64
494/E5	65
494/E6	66
494/E5	67
494/E7	68
494/E7	69
494/E7	70
494/E8	71
494/E9	72
494/E10	73
494/E9	74
495/B2	75
495/E2	76
495/B4	77
495/E4	78
495/B5	79
495/E5	80
495/B7	81
495/E7	82
SPARE	83
SPARE	84
SPARE	85
SPARE	86
SPARE	87
SPARE	88
SPARE	89
SPARE	90

REFERENCE	X42 DC CKTS.
416/B3	1
416/B3	2
416/C3	3
416/C3	4
416/D3	5
416/D3	6
429/B3	7
SPARE	8
SPARE	9
SPARE	10
432/A4	11
432/A5	12
433/B2	13
436/B2	14
SPARE	15
SPARE	16
SPARE	17
437/B4	18
437/B4	19
SPARE	20

REFERENCE	X53 CON & PROTN CKTS.
49B/E1	1
49B/E1	2
49B/E2	3
49B/E2	4
498/E2	5
49B/E3	6
498/E3	7
49B/E4	8
49B/E4	9
49B/E4	10
498/E5	11
498/E5	12
498/E6	13
498/E6	14
49B/E6	15
49B/E7	16
498/E7	17
498/EB	18
49B/EB	19
49B/EB	20
49B/EB	21
498/E9	22
498/E10	23
498/E10	24
SPARE	25
SPARE	26
SPARE	27
SPARE	28
SPARE	29
SPARE	30
SPARE	31
SPARE	32
SPARE	33
SPARE	34
SPARE	35
SPARE	36
SPARE	37
SPARE	38
SPARE	39
SPARE	40

AS-BUILT BY _____ DATE _____ | CONTRACT NO. 11131113/00 | JOB ORDER NO. S-13656

REV. NO.	DATE	DESCRIPTION
00	13 04	FOR APPROVAL

DRAWN BY RIZ CHECKED BY JKR

DATE STARTED 24.01.2013 DATE COMPLETED _____

DPRG. DEPT. CTPD ENG. DEPT. AUT-PSAC

TERMINAL BLOCK REFERENCE

132/13.8kV GT-1 RELAY PANEL-2 +R05.2

S/S 8709-132/13.8KV IN AL-KHARJ CITY

RIYADH SAUDI ARABIA

الشركة الوطنية لنقل الكهرباء

نقل الكهرباء National Grid SA

INDEX	PLANT NO.	DRAWING NUMBER	SHEET NO. SHT	SHEET NO. CONT.	REV. NO.
-	C421	CD-322928	506	507	00

NG/D2-0 (2012/01)

DMS VECTOR NGD200

THIS DRAWING AND THE INFORMATION CONTAINED HEREIN ARE THE SOLE PROPERTY OF National Grid SA NO REPRODUCTION IN FULL OR IN PART SHALL BE OBTAINED FROM THIS DOCUMENT WITHOUT THE WRITTEN CONSENT OF ITS OWNER.

REFERENCE	X62 ALARM CKT	
414/B3	1	1
414/B4	2	2
498/E1	3	3
498/E2	4	4
498/E2	5	5
498/E3	6	6
498/E3	7	7
498/E4	8	8
498/E4	9	9
SPARE	10	10
SPARE	11	11
SPARE	12	12
SPARE	13	13
SPARE	14	14
SPARE	15	15
SPARE	16	16
SPARE	17	17
SPARE	18	18
SPARE	19	19
SPARE	20	20

REFERENCE	X92 SPARE	
499/C6	1	1
499/B6	2	2
499/C7	3	3
499/B7	4	4
499/C8	5	5
499/B8	6	6
499/C8	7	7
499/B8	8	8
499/C8	9	9
499/B8	10	10
499/C9	11	11
499/B9	12	12
SPARE	13	13
SPARE	14	14
SPARE	15	15
SPARE	16	16
SPARE	17	17
SPARE	18	18
SPARE	19	19
SPARE	20	20
SPARE	21	21
SPARE	22	22
SPARE	23	23
SPARE	24	24
SPARE	25	20

AS-BUILT BY _____ DATE _____

CONTRACT NO. 11131113/00

JOB ORDER NO. S-13656

REV. NO.	DATE	DESCRIPTION
00	13 04	FOR APPROVAL

DRAWN BY RIZ CHECKED BY JKR

DATE STARTED 24.01.2013 DATE COMPLETED _____

DPRG. DEPT. CTPD ENG. DEPT. AUT-PSAC

TERMINAL BLOCK REFERENCE

132/13.8kV GT-1 RELAY PANEL-2 +R05.2

S/S 8709-132/13.8KV IN AL-KHARJ CITY

RIYADH SAUDI ARABIA

الشركة الوطنية لنقل الكهرباء

نقل الكهرباء National Grid SA

INDEX	PLANT NO.	DRAWING NUMBER	SHEET NO. SHT	SHEET NO. CONT.	REV. NO.
-	C421	CD-322928	507	NIL	00

NG/D2-0 (2012/01)

DMS VECTOR NGD200

THIS DRAWING AND THE INFORMATION CONTAINED HEREIN ARE THE SOLE PROPERTY OF National Grid SA NO REPRODUCTION IN FULL OR IN PART SHALL BE OBTAINED FROM THIS DOCUMENT WITHOUT THE WRITTEN CONSENT OF ITS OWNER.